SIMPLE Oil Stains

Tips & Tricks for Top-Notch Results p. 46

Woodsmith®

www.woodsmith.com

Vol. 29 / No. 171

ROUTER TABLE UPGRADE

DELIVERS PRECISION JOINERY EVERY TIME!

MOVE IT!

5 Shop-Built Accessories You Can Use

PLUS! CLASSIC WOODWORKING TOOL TECHNIQUES

- The #1 Tool You Need for Accurate Layouts
- The Fast Way to a Super-Sharp Edge
- Scrape Away Your Problems

A Publication of August Home Publishing

looking inside

Table of Contents

from our readers
Tips & Techniques 4

all about
Stropping. 8
Time-tested techniques for getting the ultimate edge on your chisels and plane irons.

tools of the trade
Cutting Gauges. 10
For crisp, accurate layouts, a cutting gauge can't be beat. We'll show you why.

jigs and fixtures
Incra Router Table Jig 12
This versatile jig will turn your router table into a machine for precision joinery.

tips from our shop
Shop Notebook 32

techniques from our shop
Woodsmith GO ONLINE EXTRAS
Chip Carving 38
Learn the basics of this traditional art. The tools are simple and the techniques easy to master.
DESIGNER'S NOTEBOOK

working with tools
ONLINE EXTRA video workshop
Hand Scrapers 42
This simple smoothing tool might be one of hardest-working and handiest in the cabinet.

small shop solutions
Make It Mobile 44
Tired of dragging power tools and supplies around the shop? Try making them mobile.

finishing room
Simple Oil Stains. 46
Oil stains are the number one choice for adding color to a project. Here's how to get great results.

details of craftsmanship
Solid-Wood Cabinet Backs 48
A solid-wood back can really dress up the right project. We'll give you all the details.

in the mailbox
Q & A 50

hardware and supplies
Sources 51

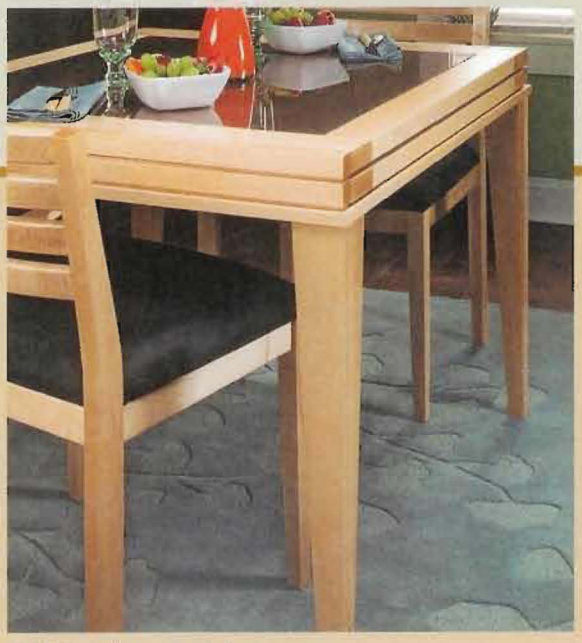

Sliding-Top Table page 14

Chaise Lounge page 22

projects

designer series project

Sliding-Top Table 14

Here's a way to have two tables in one. This unique design features "nested" tops that slide open to double the size of the table.

outdoor project

Oak Chaise Lounge 22

Comfortable, great-looking, and built solid as a rock. This outdoor project is almost too nice to subject to the elements.

weekend project

Chip-Carved Book Rack 34

There's a lot of detail packed into this small project. Craftsman-styling and the chip-carved panels make it a great project to build.

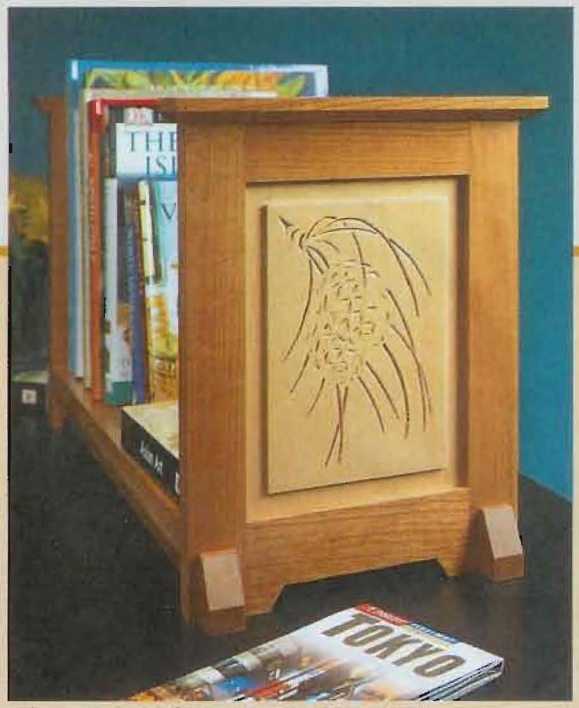

Chip-Carved Book Rack page 34

editor's note
Sawdust

A while back I had the opportunity to see some chip carving by Elaine Hoekman-Dugan, a local craftsperson. We were planning to include some chip carving on the book rack featured in this issue (lower left photo). So I wanted to ask her if she would come in and talk about her work.

A few days later, Elaine arrived carrying a rather large bag. As she talked with several editors and designers, she reached into the bag and started pulling out various carved wood items and passed them around the table. Spoons, plates, crosses, and boxes of various shapes and sizes, each one more intricately carved than the last, kept appearing from the bag.

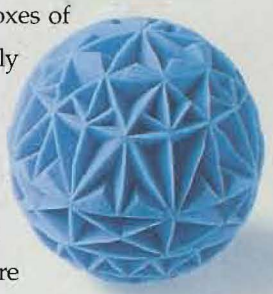

Finally, she rolled several small, brightly colored balls across the table, each one beautifully and intricately decorated with a chip-carving pattern. I couldn't quite figure out what they were made of — they certainly weren't wood. When I asked Elaine about them, she said they were made from golf balls. She had removed the white outer skin and had chip carved the center material. It's truly amazing.

Her carvings are beautiful and although she said it was "easy," it was clear they'd be difficult for a beginning carver to tackle. She suggested we try something a little more forgiving. And I think the pine cone, dragonfly, ginkgo leaves, and the simple geometric pattern shown on page 41 fit the bill nicely.

We were so impressed with Elaine and her work that we planned on having her do some of the carvings in this issue. But sadly, that was not to be. Shortly after our meeting, she became very ill and passed away. In her memory, we've put some photos of her work on our website. To see her carvings, go to www.Woodsmith.com, click Online Extras, and look under Issue 171.

Terry

ONLINE EXTRA video workshop

Woodsmith GO ONLINE EXTRAS

These two symbols let you know there's more information online at www.Woodsmith.com. There you'll see step-by-step videos, technique and project animation, bonus cutting diagrams, and a lot more.

Tips & Techniques

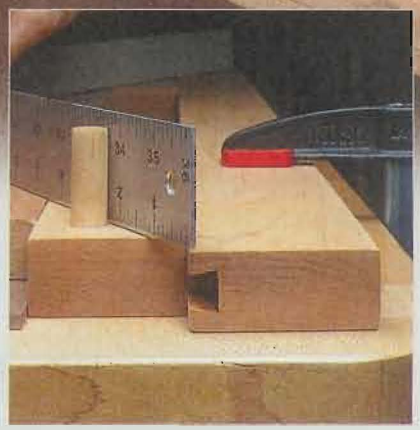

Adjustable Arc Marking Gauge

Whenever I need to make an arc in a project, I've had good results bending a thin metal ruler to the desired curve between two brads. The trouble with this setup is locating the brads to avoid putting holes in the project or my workbench. The brads can also work loose while I'm drawing the arc. I solved those concerns by designing the marking gauge you see illustrated here.

As you can see in the photo above, the gauge consists of a long beam with two sliding stops. It works using a sliding dovetail joint. The "tails" on the stops slide along the slot in the dovetailed beam.

Each stop holds a ½"-dia. dowel pin to support the metal ruler when it's flexed. To keep the stops in position, the pins are installed in the upper corners of each stop. As the ruler bends, the ends of the ruler push against the pins, wedging the stops in the groove, as in the photo above.

Using the gauge is pretty straightforward. Start by clamping it to your workbench (inset photo). Then, flex the ruler between the stops, adjusting them until the arc is at the desired curve, and draw the arc. The jig works best if the workpiece is as level with the jig as possible.

Joe Strickland
Rushville, New York

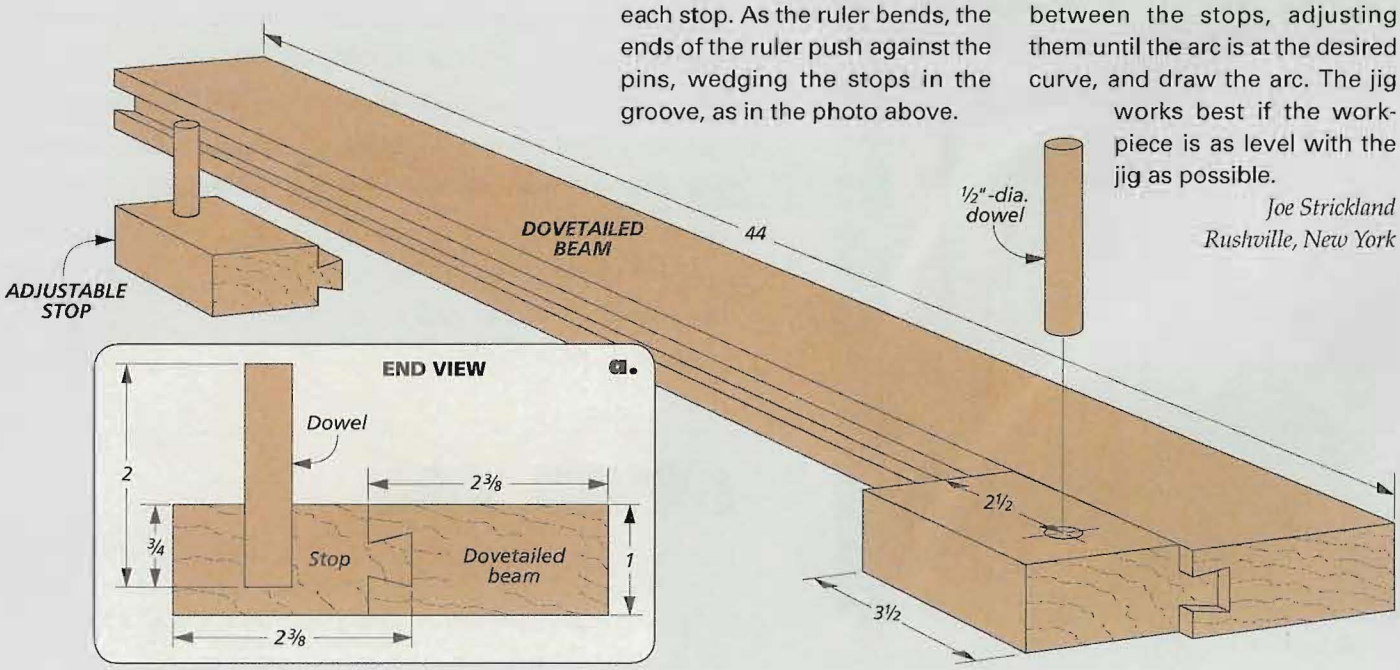

Modified Push Pad

To be safe, I always run workpieces through my table saw or router table using a push stick or pad. The problem I have with some commercial push pads is that they can slip during use. To eliminate that problem, I added a pair of wood axle pins (often used for toys) to the end of the pad.

The pins fit in ¼" holes I drilled in the back of the push pad. I made the holes a little oversized so the pins can slide fairly easily in and out of the holes.

The round heads on the pins prevent them from falling through the holes. I also have different lengths of pins to fit varying thicknesses of workpieces. Now, I can safely control workpieces without worrying about the pad slipping.

Gordon Gratta
Bondurant, Iowa

Quick-Release Drill Press Table

I often use an auxiliary table on my drill press, but there are times when I don't need it. And it's a chore to remove it. To make the task easier, I made changes to the way the table is mounted.

As you can see in the photo below, I added cleats and toggle clamps to the table. The cleats fit snugly against the bottom of the drill press table and are aligned so that the table goes on straight every time. The clamps are installed on the rails and hold the auxiliary table firmly to the drill press table.

Whenever I need to remove the auxiliary table, or even make adjustments to it, all I have to do is release the clamps and slide the table off the drill press. And it's just as simple to put the table back on as well.

Robert K. Catterson
Pewaukee, Wisconsin

SUBMIT YOUR TIPS

If you have an original shop tip, we would like to hear from you and consider publishing your tip in one or more of our publications. Just go to our web site at *www.Woodsmith.com* and click on the link, "SUBMIT A TIP."

Or you can mail your tip to:

Woodsmith Tips and Techniques
2200 Grand Avenue
Des Moines, IA 50312

Please include your name, address, and daytime phone number in case we have any questions. We will pay up to $200 if we publish your tip.

FREE TIPS BY EMAIL

Now you can have the best, time-saving secrets, solutions, and techniques sent directly to your computer. Just go to **www.woodsmith.com** and click on ***"Sign Up for Free E-Tips."*** You'll receive one of our favorite tips by email each week.

Woodsmith

No. 171 June/July 2007

PUBLISHER Donald B. Peschke

EDITOR Terry J. Strohman

MANAGING EDITOR Vincent Ancona
CONTRIBUTING EDITOR Bryan Nelson
ASSOCIATE EDITORS Phil Huber, Ted Raife
ASSISTANT EDITORS Mitch Holmes, Randall A. Maxey, Dennis Perkins

EXECUTIVE ART DIRECTOR Todd Lambirth
SENIOR ILLUSTRATORS David Kreyling, Dirk Ver Steeg, Harlan V. Clark
SENIOR GRAPHIC DESIGNER Bob Zimmerman
ILLUSTRATORS David Kallemyn, Peter J. Larson
GRAPHIC DESIGNERS Shelley Cronin, Katie Rodemyer

CREATIVE DIRECTOR Ted Kralicek

SENIOR PROJECT DESIGNERS Ken Munkel, Kent Welsh, Chris Fitch, Jim Downing
PROJECT DESIGNERS/BUILDERS Mike Donovan, John Doyle
SHOP CRAFTSMEN Steve Curtis, Steve Johnson
SR. PHOTOGRAPHERS Crayola England, Dennis Kennedy
ASSOCIATE STYLE DIRECTOR Rebecca Cunningham
ELECTRONIC IMAGE SPECIALIST Allan Ruhnke
VIDEOGRAPHERS Craig Ruegsegger, Mark Hayes

Woodsmith® (ISSN 0164-4114) is published bimonthly (Feb., Apr., June, Aug., Oct., Dec.) by August Home Publishing Company, 2200 Grand Ave, Des Moines, IA 50312.

Woodsmith® is a registered trademark of August Home Publishing.
Copyright© 2007 August Home Publishing Company. All rights reserved.

Subscriptions: Single copy: $4.95. One year subscription (6 issues), $24.95. (Canada/International add $10 per year, U.S. funds.)
Canadian Subscriptions: Canada Post Agreement No. 40038201. Send change of address information to PO Box 881, Station Main, Markham, ON L3P 8M6. Canada BN 84597 5473 RT
Periodicals Postage Paid at Des Moines, IA, and at additional offices.
Postmaster: Send change of address to *Woodsmith*, Box 37112, Boone, IA 50037-2112.
Subscription Questions? Write to *Woodsmith*, P.O. Box 842, Des Moines, IA 50304 or call 1-800-333-5075, 8:00 am to 5:00 pm, Central Time, weekdays. Or send an email to: orders@woodsmith.com
Email: woodsmith@woodsmith.com
World Wide Web: http://www.woodsmith.com

www.Woodsmith.com

ONLINE SUBSCRIBER SERVICES

- **ACCESS** your account
- **CHECK** on a subscription payment
- **TELL US** if you've missed an issue
- **CHANGE** your mailing or e-mail address
- **RENEW** your subscription
- **PAY** your bill

Click on "Manage My Account" in the list on the left side of our home page. Menus and forms will take you through any of the account-maintenance services you need.

HOW TO REACH US:
FOR SUBSCRIPTIONS, ADDRESS CHANGES OR QUESTIONS, WRITE OR CALL:
Customer Service
2200 Grand Ave., Des Moines, IA 50312
800-333-5075 8 a.m. to 5 p.m. CT

OR VISIT OUR WEB SITE:
www.Woodsmith.com

AUGUST HOME PUBLISHING COMPANY

Printed in U.S.A.

Box Fan Dust Filter

While I have dust collection for my large power tools, sometimes I need a "task-oriented" dust filter. That's where this box fan setup comes in (photo above).

The beauty of this design is that the fan not only draws dust away from the work area, but it also draws that sawdust-filled air through two standard-size furnace filters. The filters work together to trap most of the sawdust that goes through them, instead of just blowing it out the other side of the fan.

As the drawing on the left shows, the frame is deep so the fan won't overturn easily. And I added feet to the bottom of the base to help keep the unit stable.

The key to this unit is that it's really divided into two sections. The fan sits securely in the rear half, while the front section holds the two furnace filters. Cleats and spacers keep the filters safely away from the fan.

And with the face frame being open at the top, the filters can easily be replaced when they get filled up with too much dust.

This fan filter does a great job of keeping the fine sanding dust out of the air (and my lungs).

Jim Jordan
Bergen, New York

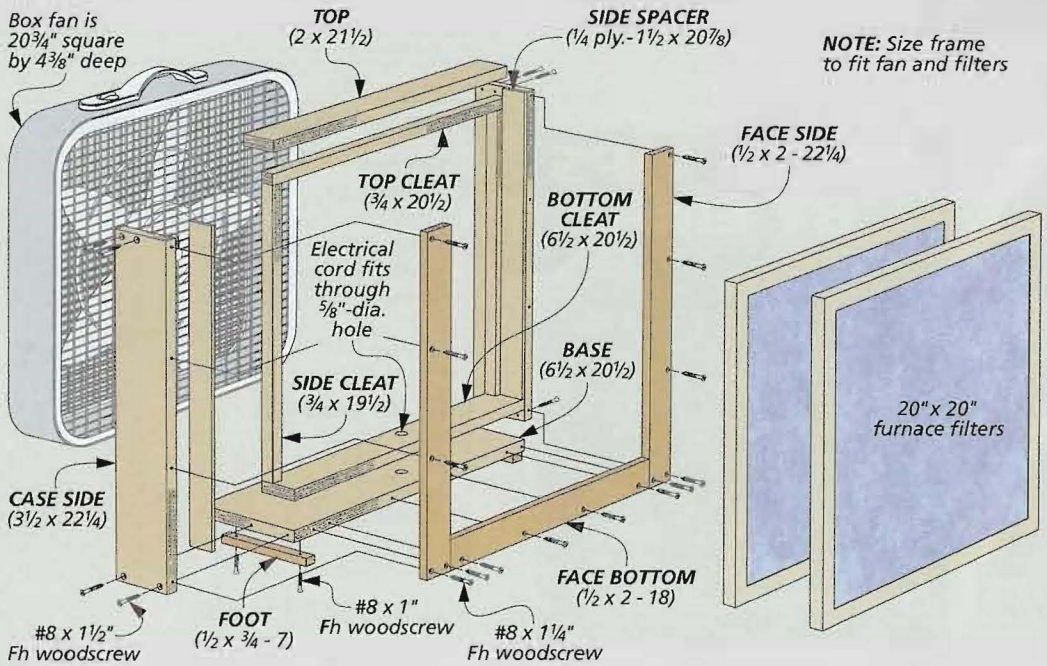

Rip Fence Hold-Down

When using a featherboard or a hold-down while ripping stock on my table saw, the rip fence sometimes lifts enough for thin stock to work its way under the fence, ruining the cut. My solution was to attach a hold-down to the rear of the fence (photo below).

If you look at the inset photo below, you'll see how the hold-down "grabs" the back rail of the table saw. I used a piece of aluminum channel so the hold-down would slide easily along the rail.

A couple of blocks and some screws connect the channel to the back end of the rip fence. The size of the block matches the distance between the bottom of the fence and the channel, as in detail 'a.'

(Depending on the make and model of your saw's rip fence, you may have to alter the sizes of the pieces shown below.)

With this hold-down, my saw's fence now stays put when I'm ripping thin stock.

Paul Korman
East Williston, New York

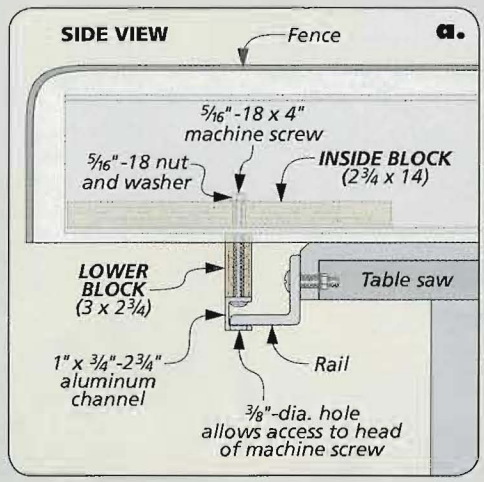

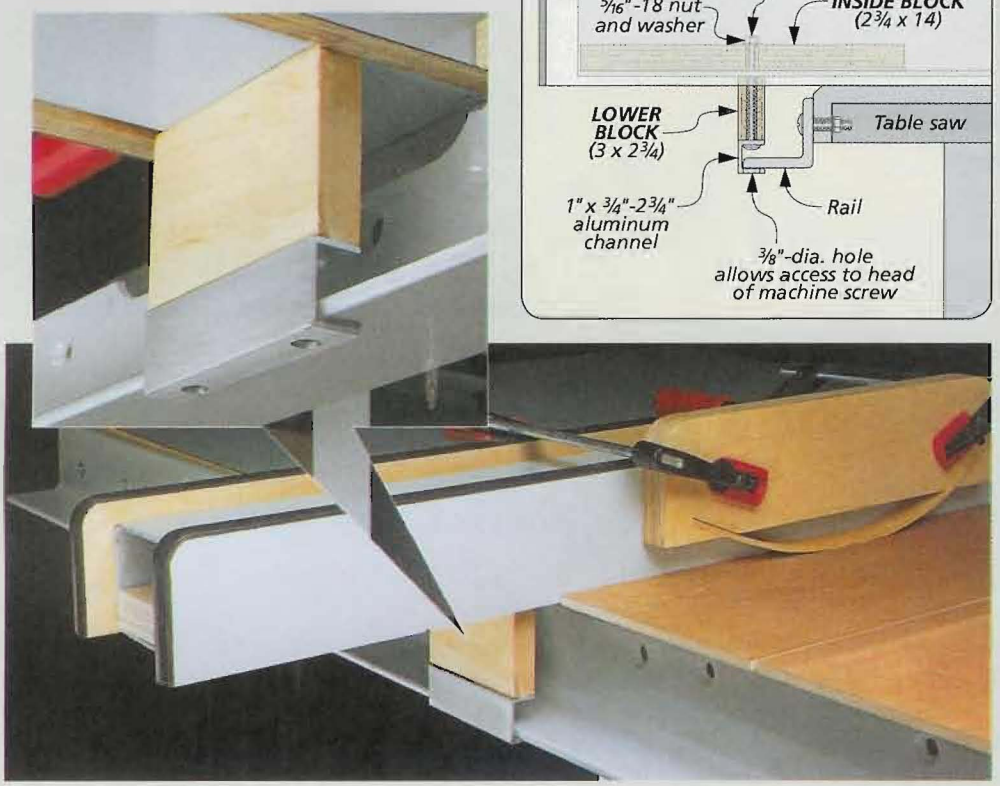

Quick Tips

HANDLE HOLDS IN BACK PANELS

Whenever I build a large furniture project, I cut a hand-hold slot in the back panel in a comfortable place for easy lifting. By doing that, I'm incorporating a ready-made grip whenever the project needs to be moved around. And it's a lot easier than trying to lift it from the bottom with one hand and balancing it with my another hand.

Don Esterberg
Crestview, Florida

SMALL PARTS ORGANIZER SYSTEM

Over the years, I've collected dozens of small plastic bins for storing small pieces of hardware. Reading all those labels to find the hardware I was looking for is time-consuming. So, I came up with a better plan.

First, I numbered each bin with plastic model paint. Then, I filled each bin with hardware and wrote the corresponding bin number on a chart I hang near the bins.

Now, I look up the hardware on the chart, find its number, and then locate the right bin easily.

Eugene F. Boerder
Holly Lake Ranch, Texas

COLORED GLUE

To help me see glue squeezeout, I add a few drops of food coloring to the glue. That way I know when I sand the color off, the glue squeezeout is gone, too.

James McGarry
Failford, Australia

Win This Porter-Cable Variable Speed Router

That's right, send us your favorite shop tips. If your tip or technique is selected as the featured reader's tip, you'll win a *Porter-Cable* variable speed router just like the one shown here. To submit your tip or technique, just go online to *www.woodsmith.com* and click on the link, "SUBMIT A TIP." You can submit your tip and upload your photos for consideration.

The Winner!

Congratulations to Paul Korman of East Williston, New York. His table saw fence hold-down was selected as the winner of the *Porter-Cable* router. The hold-down prevents the fence from rising as he runs stock through his table saw.

To find out how you could win a *Porter-Cable* variable speed router, check out the information on the left.

stropping — a fast way to get

The Ultimate Edge

Here's a fresh look at a simple, "old-fashioned" honing technique that will get (and keep) your edge tools razor sharp.

Flat, smooth MDF makes a perfect, inexpensive strop

Commercial leather strops are glued to plywood for a rigid surface

There's no mistaking the feel of a sharp chisel slicing through wood to trim a joint for a perfect fit. The challenge is finding a way to get that sharp edge.

No matter what sharpening method you use, chances are you can get an even sharper edge by including stropping in your routine. On the surface, stropping may seem like an "old-fashioned" technique that's been passed over by fancy ceramic stones or powered grinding and polishing wheels.

The truth is stropping is no different than any other honing method. Essentially, a tool is dragged across an abrasive surface. The finer the abrasive, the more mirror-like the cutting edge of the tool will be. To get this razor-sharp edge, it only takes two things: a strop and a stropping compound.

THE STROP

For thin-bladed straight razors in a barber shop, a wide leather belt works just fine for a strop. But for woodworking tools, you'll need something more substantial.

The reason is that a limp belt will flex and buckle in use. This will slightly round over the cutting edge. To make up for this, some strops have a thick piece of leather glued to a board. You can see a new version in the bottom photo at left. This added stiffness works quite well for most edge tools (lower photo on the opposite page).

MDF. A modern alternative to a leather strop is shown above — a plain piece of MDF. The advantage of using an MDF strop is that it's smooth and dead flat. And if the strop gets nicked or dished, just throw it out and cut a new one.

ABRASIVE COMPOUND

The strop provides the support for the tool. But for the real polishing to take place, you need to add a fine abrasive. That's where the stropping compound comes in.

One common choice is buffing compound (jeweler's rouge). And this will do a fine job. But in the margin photos on the opposite page, you can see two stropping compounds that are designed specifically for woodworking tools.

The upper bar is made by *Veritas*, and looks and feels like a large, green crayon. In this compound, the chromium oxide abrasive is embedded in wax. The wax helps

to hold the grit on the strop and provides some lubrication.

The other bar you see is called *Yellowstone* and has a dry, chalky consistency. And while the manufacturer won't divulge what's in it, the compound breaks down into a fine, slippery powder that cuts quickly without needing any additional lubrication during use.

I've found that both compounds work equally well and leave a highly polished edge. And best of all, the stropping technique can be mastered in just a few minutes. (For sources, turn to page 51.)

THE STROPPING TECHNIQUE. The first step is to "charge" the strop with compound. All you need to do is rub a thin layer across the strop with firm, even pressure.

Now it's a simple matter of pulling the tool across the compound away from the edge. To avoid having the edge snag and dig into the strop, you don't want to push.

In a couple of strokes, you'll notice a black paste develop, as shown in the main photo on the facing page. This is the steel that's been worn off. Don't worry about scraping it off. The paste actually works to polish the edge faster.

After a dozen strokes or so, you'll see the cutting edge of your tool is getting more polished. When it has a mirror finish, you can finish up by taking a couple of strokes on the back. Over time, if you feel like the strop isn't cutting as well, simply rub on a little more compound. It really is as easy as it sounds.

▲ Strop carving tools often to keep them sharp. Move the tool across the strop away from the edge to avoid catching.

PUTTING IT TO WORK

Once you have the hang of *how* to strop a tool, you need to know *when* to strop. I'd like to share a couple ways to put a strop to work.

FINAL SHARPENING STEP. As I mentioned earlier, stropping fits in perfectly as the final step in the sharpening process. Depending on the condition of my tools, I use a combination of grinding and waterstones to shape and sharpen each tool. Then, I take a handful of strokes on the strop to make the tool razor sharp and ready to go to work.

TOUCH UP THE EDGE. After using a freshly sharpened tool for a while, you'll notice that the edge starts to wear. If you keep a strop close by, you can maintain the edge without going through the whole sharpening routine again (main photo on the facing page).

I've found there are two keys to making this work efficiently. The most important is to strop the tool just as soon as it starts to get dull. The longer you wait, the more likely you'll need to go back to a coarser stone to sharpen the cutting edge.

Then you can save time and hassle by stropping without a honing guide. Don't worry, it sounds a lot harder than it really is. Just take a look at the box below.

I learned this technique from a friend who does a lot of hand tool work. It's best for chisels used for light paring. (Hard use and heavy pounding breaks down the edge.) But you'll be amazed at the results and how quick and easy it is to keep your tools in top shape. W

Veritas Honing Compound

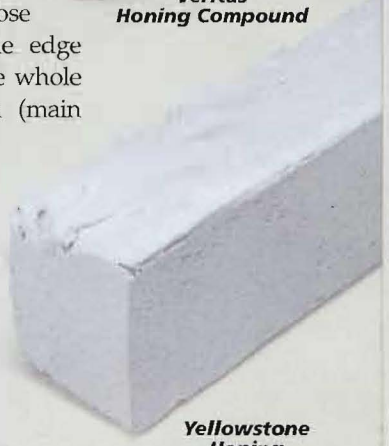

Yellowstone Honing Compound

▲ Stropping compounds have a fine abrasive embedded in a waxy or chalk-like bar.

How-To: Free-Hand Stropping

▲ First, rub the stropping compound onto the strop. You want to apply a thin, even layer that's wider than the tools you'll be sharpening.

▲ Once the compound is applied, you can begin stropping. To find the right angle, rest the chisel on its "heel" at the far end of the strop.

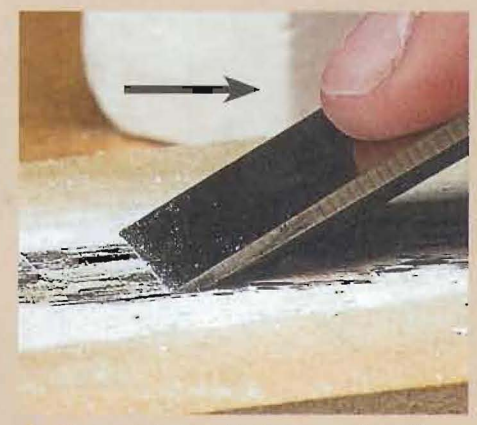

▲ Then, rock the chisel forward until you can feel the tip make contact with the strop. Now, pull the chisel back. Lift and repeat for the next stroke.

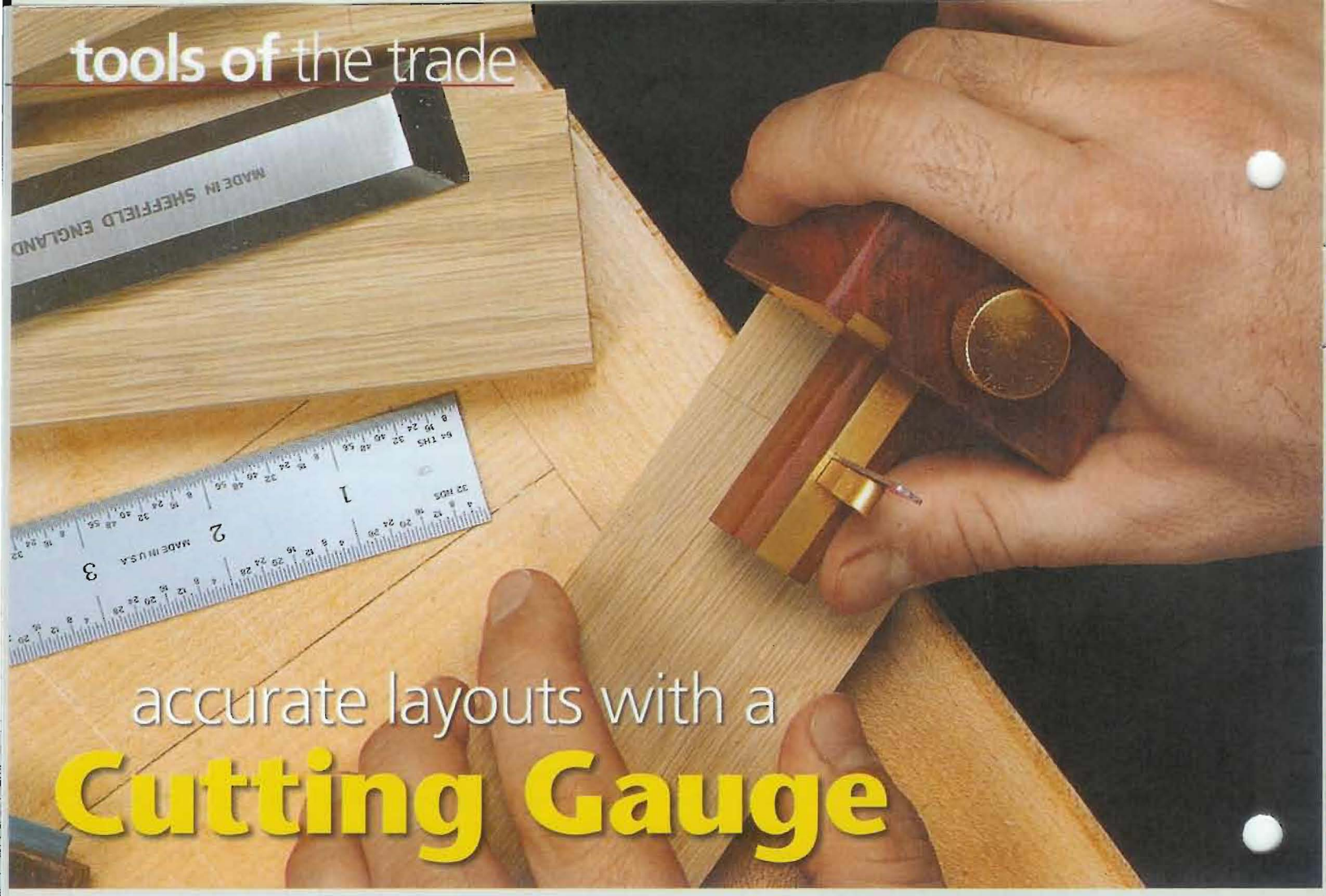

accurate layouts with a Cutting Gauge

When it comes to fast and accurate layouts, this traditional tool will more than earns its keep in the woodworking shop.

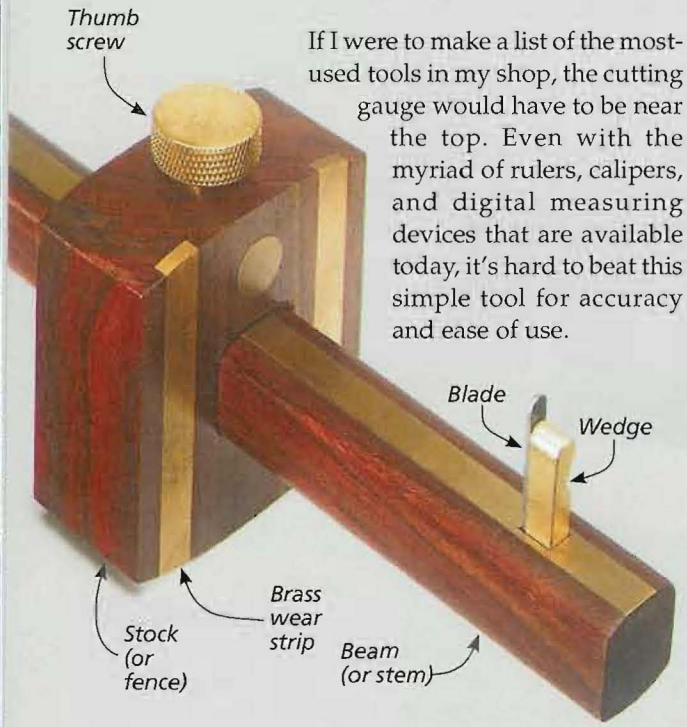

If I were to make a list of the most-used tools in my shop, the cutting gauge would have to be near the top. Even with the myriad of rulers, calipers, and digital measuring devices that are available today, it's hard to beat this simple tool for accuracy and ease of use.

A cutting gauge is a close cousin of the marking gauge. But instead of a pin, a cutting gauge has a blade. This is the key difference. The cutting gauge slices the wood fibers, scoring them instead of tearing them like a marking gauge does (see photos at right).

It may sound like a minor point, but if you spend much time using one of these gauges, you'll quickly see why I've relegated my marking gauge to the bottom of the toolbox. And why I now use the cutting gauge almost exclusively for my layout tasks.

DESIGN. A cutting gauge is one of those simple tools whose basic design hasn't changed much in the last couple of hundred years. Like the marking gauge, it has a beam and an adjustable stock that is held in place with a thumb screw.

The only differences you're likely to find between the various gauges on the market have to do with

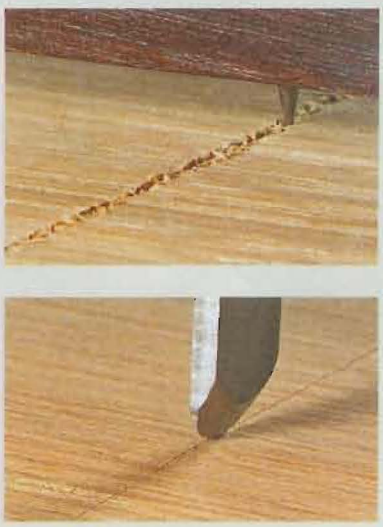

▲ A marking gauge (top) tears its way across the wood, while a cutting gauge scores a line.

the level of fit and finish and the amount of brass details used in the construction. The more expensive gauges have brass thumb screws as well as brass wear strips inlaid into the stock and beam.

THE BLADE. One thing you'll notice when looking at new cutting gauges is that the blade on most of them is only roughly ground. Some of these gauges feature a blade with a single bevel, while others have a blade with a double bevel. The double bevel allows you to either push or pull the gauge.

ROUND-NOSE PROFILE. But for the best results, I like to re-grind the end of the blade to a round-nose profile, like that shown in the drawing below. It's a little bit trickier to hone this profile, but it makes the cutting gauge a lot easier to use.

There's one other thing to mention in regards to the blade. I like to insert the blade in the beam so that the bevel is facing the stock. This makes it easier to measure the distance from the stock to the outside of the blade. And it also helps to draw the stock tight against the edge of the workpiece.

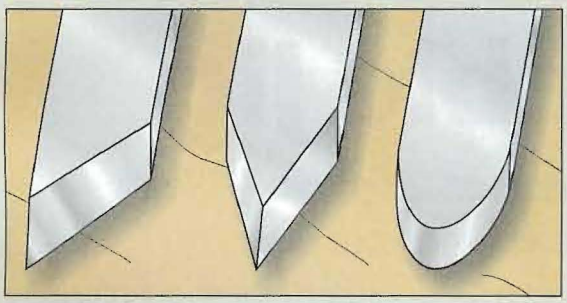

Blade Bevels. *Most cutting gauge blades are ground with one or two bevels. For best results, re-shape the bevel to a round-nose profile, as shown above.*

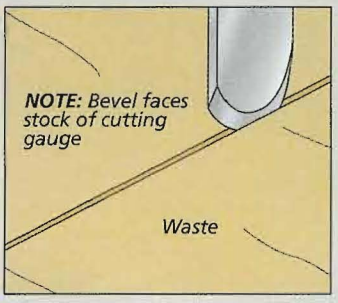

Bevel. *The bevel should face the stock to draw the gauge tight against the workpiece.*

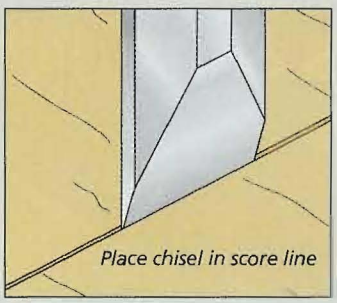

Score Line. *The line left by the cutting gauge creates a perfect starting point for your chisel.*

TECHNIQUE. Using a cutting gauge is simple. You just move the stock along the beam in relation to the blade, according to the dimensions you're using.

To make minor adjustments to the stock, tighten the thumb screw down just enough to lightly hold the stock in place. Then gently tap either end of the beam straight down on the top of your workbench to nudge the stock down a hair and tighten the thumb screw.

Once the gauge is adjusted, simply hold the stock against the edge of the workpiece and draw the blade across the surface to create a score line. For crisp layout lines, try to scribe the line in one single pass, rather than going over it again and again.

USES. One of the main advantages of using a cutting gauge over a pencil and ruler is that you can repeat the settings on every workpiece that you mark out. So I use a cutting gauge for quickly laying out all kinds of woodworking joints — tenons, mortises, dovetails, and rabbets. You just measure once and you're guaranteed that all your lines will be located identically.

CLEAN UP. Another advantage is the score line of the blade creates a perfect starting point for your chisel when it comes to paring away the waste. For example, I use a cutting gauge to mark out the shoulders of a tenon. Then I'll take the workpiece over to the table saw and cut away most of the waste, stopping just shy of the layout line.

Finally, I come back in with a sharp chisel and pare away the remaining waste for a perfect fit. The scribed score line helps you to register your chisel while cleaning up the waste, as you can see in the drawings above.

Once you start using a cutting gauge, you'll find yourself reaching for it more and more. Eventually, you'll wonder how you ever got along without one. W

Veritas Marking Gauge

Unlike traditional cutting gauges that use a blade, this marking gauge from *Veritas* uses a hardened steel wheel cutter to mark layout lines (inset photo at right). So it works like a cutting gauge. *Veritas* offers this tool with a couple of options — a graduated rod (below) and a micro-adjust feature to make fine adjustments. For sources, turn to page 51.

A recess ► milled into the face of the gauge allows you to retract the cutter wheel to protect it when not in use.

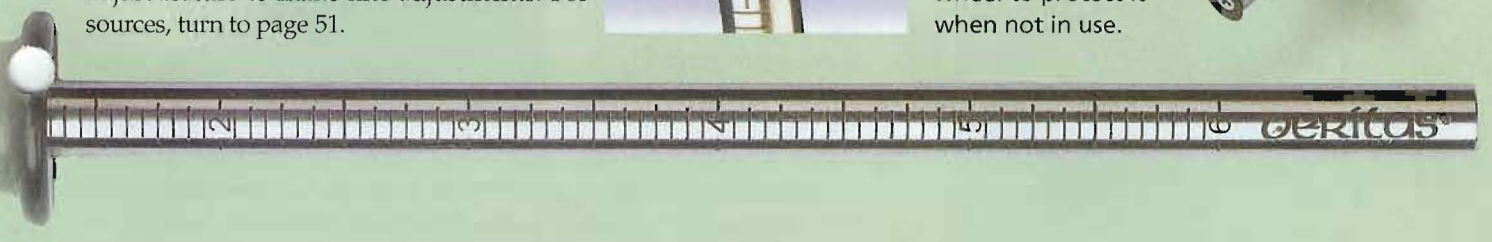

Incra Router Table Jig

Versatile, easy to use, dead-on accurate, and affordable — you'll welcome the addition of this router table jig to your shop.

If you're a router table enthusiast, chances are you've heard of the *Incra Jig*. The selling point of this well-known tool is that it turns your router table into an extremely versatile and very precise joinery machine. You can cut box joints, half-blind and full-blind dovetails, and variable-spaced dovetails, as well as a couple of unique joints (corner-post dovetails and double dovetails). It's a little bit like having a shop's worth of tools attached to the top of your router table.

But to some, the *Incra Jig* may also bring to mind a steep price and intimidating complexity. Well, the good news is that *Incra* and *Rockler* have teamed up to offer a simplified, no-frills version of the *Incra* router table jig (sold as the *Incra* Universal Precision Positioning Jig). Available only through *Rockler*, it gives you the precision and versatility that the *Incra Jig* is known for at a cost that's easier to swallow and a learning curve that's much gentler.

WHAT IT DOES. Basically, the *Incra Jig* provides you with a very accurate way to position and reposition the fence on your router table. This means you can move the fence through a series of precise cuts on a workpiece and are then able to quickly repeat the exact cuts on a second workpiece. Without any layout or measuring, the fence is always right on the money. And this is what makes accurate joinery possible.

▼ The interlocking plates on the *Incra Jig* allow precise positioning of your router table fence.

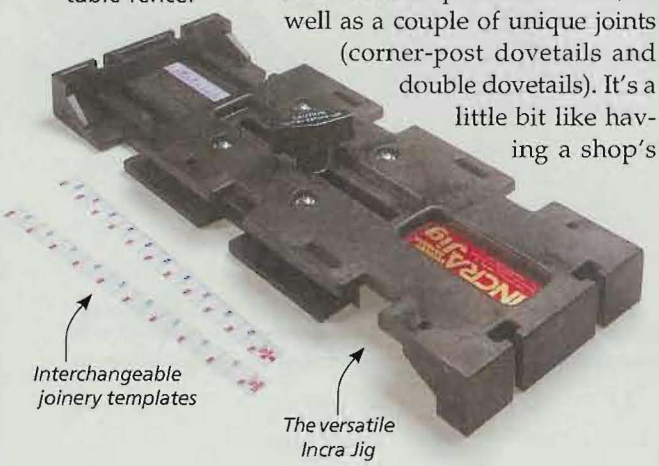

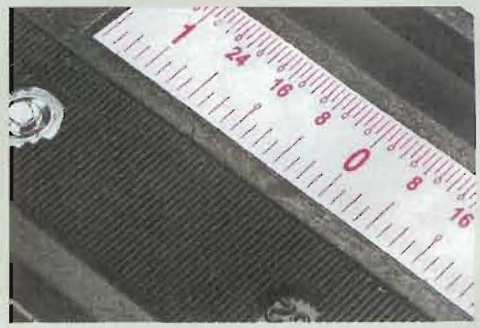

▲ Mating sawtooth racks on the two plates are the key to the extremely precise adjustment allowed by the jig.

WHAT YOU GET. The basic jig, shown in the margin on the opposite page, will only cost you about $60. For another $60, you can add both the dedicated fence (with a stop block) and the right angle guide, seen in the main photo at left. And you'll need an extra-deep top to accommodate the jig on your router table. (All these "extras" can be shop-built.)

HOW IT WORKS. The hard plastic jig consists of two identical plates that mate snugly and slide along one another. One half of the jig is bolted to the fence while the other half is attached to a user-made plywood base (main photo, left). The base is clamped or bolted to the table and allows rough adjustment of the fence.

But the real heart of the system is the two pairs of mating sawtooth racks that are attached to the plates (lower right photo on the opposite page). Each tooth represents exactly 1/32" of travel. You simply loosen the clamping knob, lift the upper plate to disengage the teeth, reposition it by re-engaging the teeth and tighten it down. The back edge of the top plate is referenced against the attached scale or one of the joinery templates (more on this later) to quickly zero in on the right fence setting (photo below).

USING THE JIG. The *Incra Jig* system can make most standard router table operations easier and more accurate. But the great joinery options are where the jig really earns its keep. (See the photo at right for a small sampling.)

TEMPLATES. The steps used to make each of the many possible types of joints are a little bit different. But the common thread and the real key to making each joint is an easy-to-use template. You get two templates included with the jig. One for making 1/2" dovetails and another for 3/8" box joints. (An extensive joinery template library is available for about $20.)

The basic process used to cut half-blind dovetails is shown in the box below. You start with a couple of preliminary adjustments, then position the template on the jig and tape it in place (photo at left).

The template shows you exactly where to position the jig (and fence) for each of the cuts. You make a cut, loosen the top plate, move the back edge of the jig to the next mark and tighten it down. And your next cut will be right on the money. The "A" marks on the template handle one half of the joint — the "B" marks are used to cut the mating half. The templates make the work quick, easy, and pretty much foolproof.

I'll admit that working with the *Incra Jig* takes some getting used to and requires a little schooling. But you'll find that the detailed written instructions and the included instructional DVD are a great help in getting started. And once you're familiar with the routine, the potential of this versatile jig will make it a very handy addition to your shop.

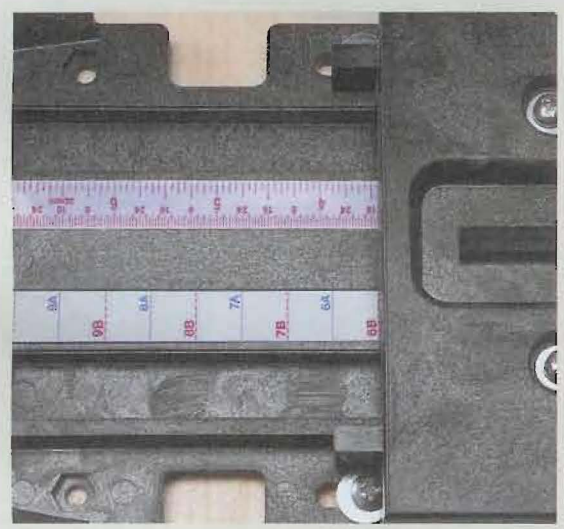

▲ Joinery templates (lower scale) are temporarily attached to the jig to allow quick and precise readjustment of the fence between cuts.

▲ With the *Incra Jig*, versatility is the name of the game.

How To: Half-Blind Dovetails with the Incra Jig

▲ The first step is a relief cut on the inside edges of the tail pieces. This allows the tails to fit the rounded pin sockets.

▲ Next, you clamp the tail pieces to the right-angle guide and use the template as a guide to make the tail cuts.

▲ Finally, the pins cuts are made using the opposite template marks. A stop block controls the depth of cut.

sliding-top Table

It's like getting two tables in one. This stylish design doesn't take up much floor space, but it slides open to provide seating for six.

Whether it's a place for dining or entertaining, you can't beat the convenience of an expanding table. Normally, though, to expand a table, you'd have to pull it apart and drop in a leaf. Then you need to find a place to store the leaves where they won't get damaged when you're not using them.

This table solves the problem by using two "nested" tabletops. The upper top pulls out then the lower slides up and locks in position level with the first.

The good news is the sliding tabletops don't require any unusual hardware or difficult construction techniques. They're built with mortise and tenon joinery and slide in hardwood guide rails you can make at the router table.

Glass panels cover the veneered top for extra protection

Built-in slide lock secures tops in extended position

Routed channel in the guide rails provides a path for the sliding frames

Solid mortise and tenon joinery on the frames guarantees years of trouble-free performance

Contrasting veneer adds a decorative detail

The frames move on UHMW slides and shop-made nylon bearings

Guide rails support sliding top frames

MDF veneer substrate fits in a rabbeted frame

Connector screws make a reliable joint between the legs and sub-top

NOTE: Guide rails and frames are made from 1¼"-thick hardwood

Connector bolts secure guide rails

Mitered hardwood edging fits flush with guide rails and frames

Plywood sub-top provides a solid base for the guide rails and sliding frames

NOTE: Legs are made from hard maple turning blanks.

Dadoes are added to outside of legs before tapering

Sturdy hardwood legs are tapered on the inside faces

CONSTRUCTION DETAILS

OVERALL DIMENSIONS:
72"W (Top Extended) x 39"D x 29¾"H

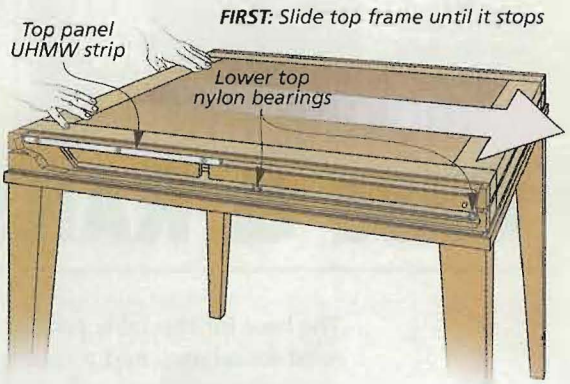

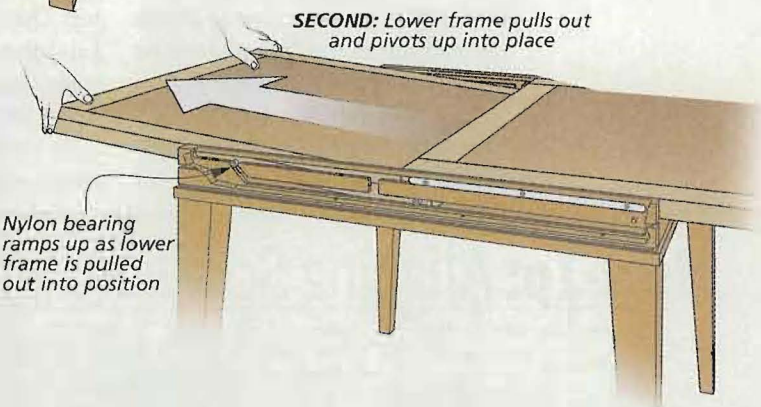

▲ **Extending the Table.** After sliding the upper frame out, just pull the lower frame out and up, then lock it in place. The lock prevents rattling and the solid sliding construction design won't sag.

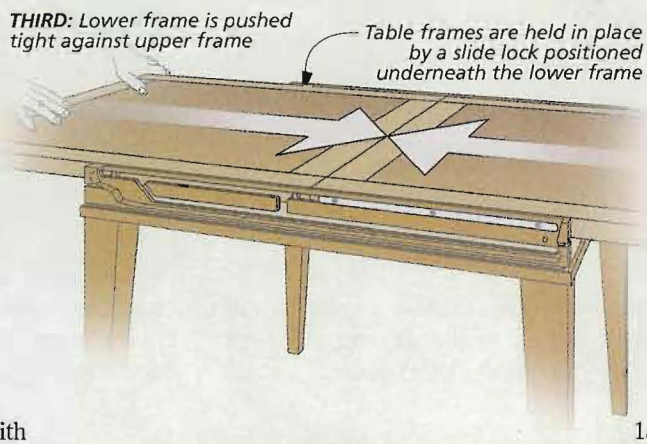

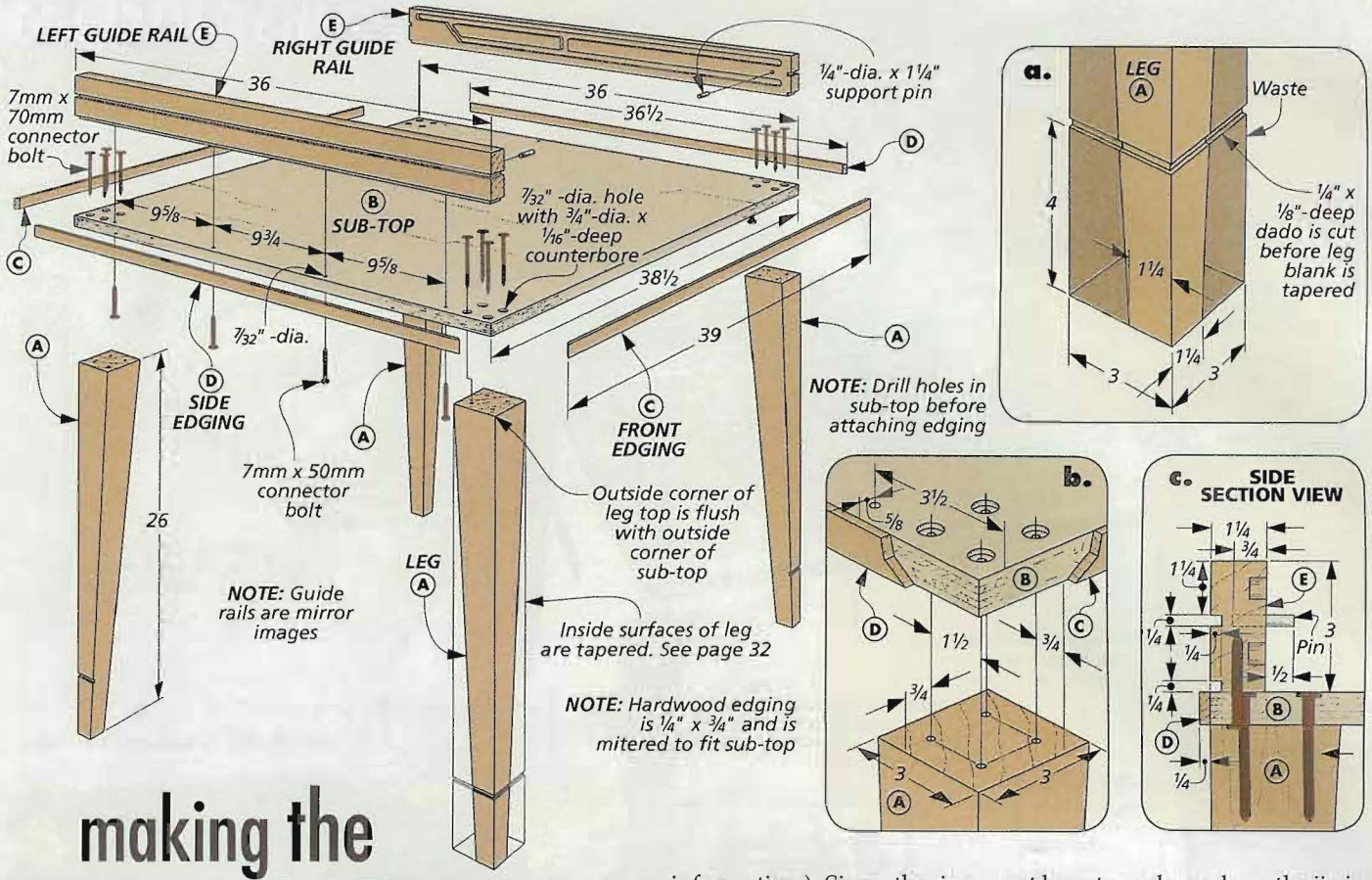

making the BASE & RAILS

The base for this table provides a solid foundation and a couple of decorative details as well. And by using connector screws to attach the sub-top to the legs, there's no need for complicated joinery.

START WITH THE LEGS. I used 3½"-square turning blanks for the legs. (Refer to Sources on page 51 for more information.) Since the inside faces of the legs are tapered, I didn't want to glue up a blank and then cut through a glue line.

After cutting the blanks to size, I predrilled holes for the screws. The key here is to use a guide to drill matching holes in the legs and sub-top. The box below shows you how I did this. Now you can use a ¼"-wide dado blade on the table saw to cut the dadoes on the legs.

To taper the legs, I used a shop-made tapering jig. You can find out how to make and use the jig in Shop Notebook on page 32.

ADD THE SUB-TOP. With the legs complete, you can begin on the sub-top. It attaches to the legs and provides a stable platform for the guide rails. The sub-top is just a plywood panel with hardwood edging. But before attaching the edging, you'll need to use the drilling guide to predrill the screw holes for the legs. Then you can add the edging to the plywood. With the base complete, you're ready to make the rails.

How-To: Aligning Screw Holes

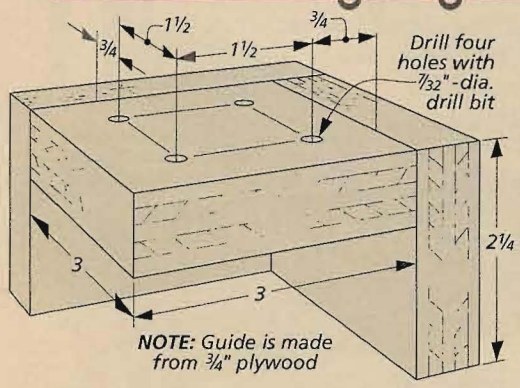

Drilling Guide. *To make sure the screw holes line up in the sub-top and legs, make this simple drilling guide.*

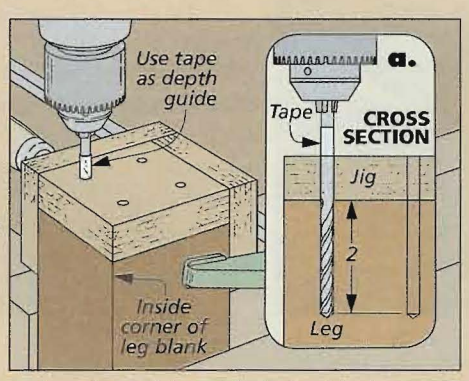

Using the Guide. *With the leg blank secured in a vise, clamp the guide to the top of the leg blank and drill the pilot holes.*

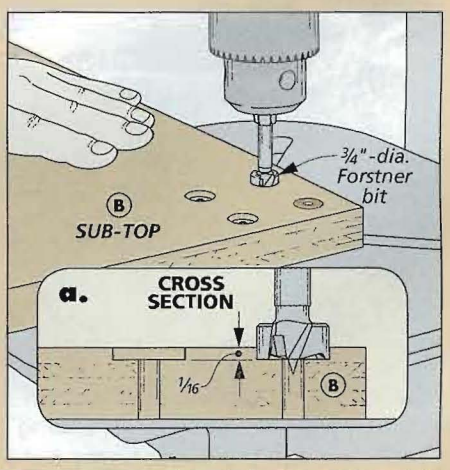

Counterbore the Sub-Top. *After drilling shank holes, use a Forstner bit to drill counterbores for the large screw heads.*

How-To:

Guide Rails

To allow the frames to slide, there are two guide rails mounted on the edges of the sub-top. The inside face of each rail has a routed channel sized to fit the sliding hardware you'll add later. You can see the layout for these channels in the right margin. Detail 'c' on the opposite page shows how the outside face has a rabbet and a groove to match the profile of the two sliding tops.

OUTSIDE FACE. I started by using a dado blade on the table saw to cut the grooves and rabbets on the outside faces first. As you can see in Figures 1 and 2, these cuts are pretty straightforward. But to continue the groove on the end of each piece, you'll need to stand them up. And for this cut, I clamped the workpieces to a tall auxiliary fence on the miter gauge.

ROUTING THE CHANNELS. Routing the channels for the rollers that hold the lower frame is a little more complicated. The two pieces need to be an exact, mirror-image match. It's a good idea to label the pieces and mark the layout on each before you make any cuts.

Now you can move to the router table and install a ½"-dia. straight bit. You'll be making "plunge" cuts for the channels. That is, you'll start with the top edge against the fence and a stop block on one end. Then you can lower the workpiece onto the bit and rout as normal.

An easy way to keep the length of the cuts accurate is to extend the layout marks to the top of the workpiece and align them with stop lines on the router fence. Figures 3 and 4 show you the details.

CONNECT THE GROOVES. After you've finished the upper and lower groove, you still need to rout paths connecting them (Figure 5). These channels allow the lower frame to move up flush with the upper frame.

ADD THE DOWELS. Finally, I added a couple of dowel pins to help support the tops. Figure 6 shows where to install them on the rail.

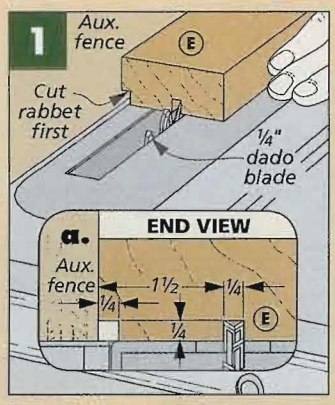

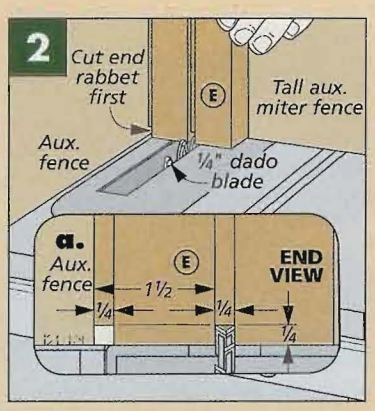

Cutting Grooves. *To keep the grooves consistent, you'll need to make the cuts using the same fence setting. An auxiliary fence on the miter gauge lets you stand the pieces on end for the end cuts.*

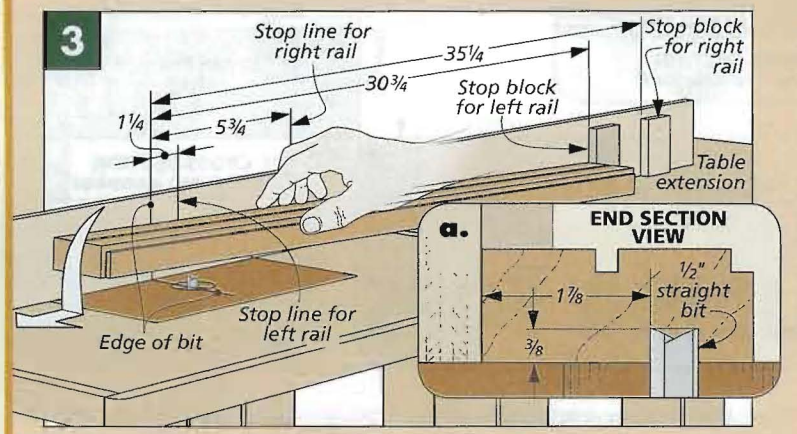

Routing Bottom Groove. *With the workpiece against the fence and the stop block, slowly lower it onto the bit and make the cut.*

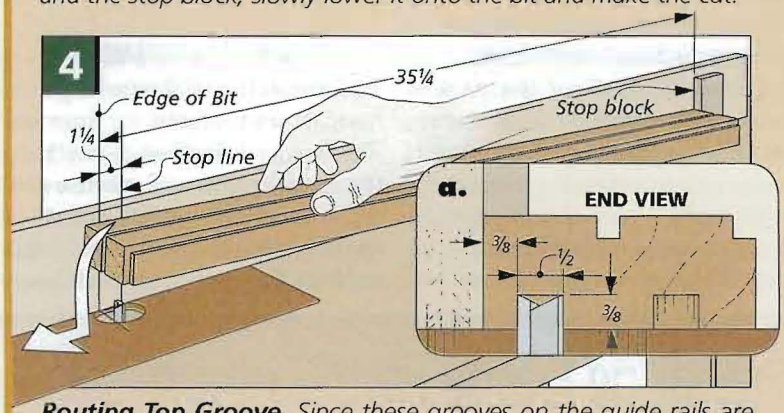

Routing Top Groove. *Since these grooves on the guide rails are mirror images, you can cut both using the same setup.*

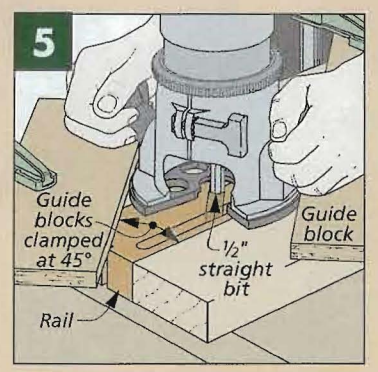

Routing the Angled Connection. *Clamp guides to the workpiece to rout the 45° angle of the channel.*

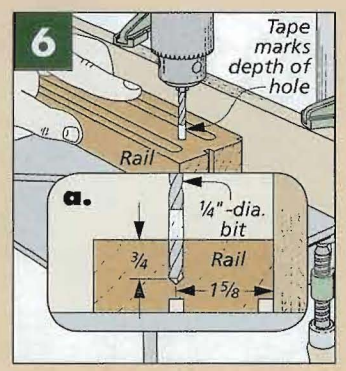

Dowel Pin Hole. *Use a drill press to make sure the holes are perfectly straight.*

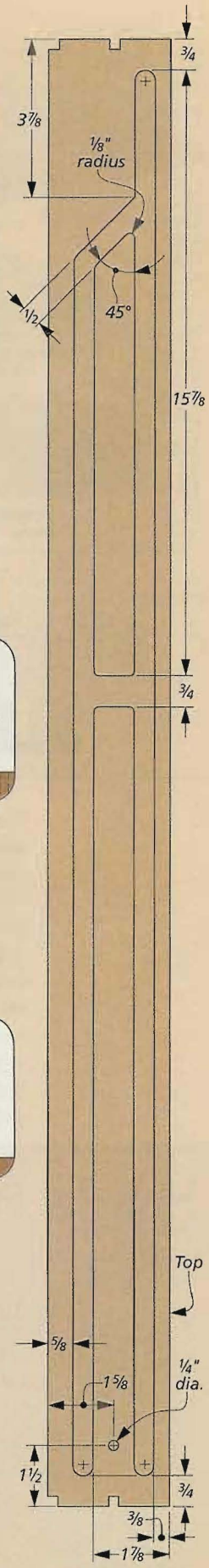

GUIDE RAIL GROOVE PATTERN
(Right rail shown, left rail is mirror image)

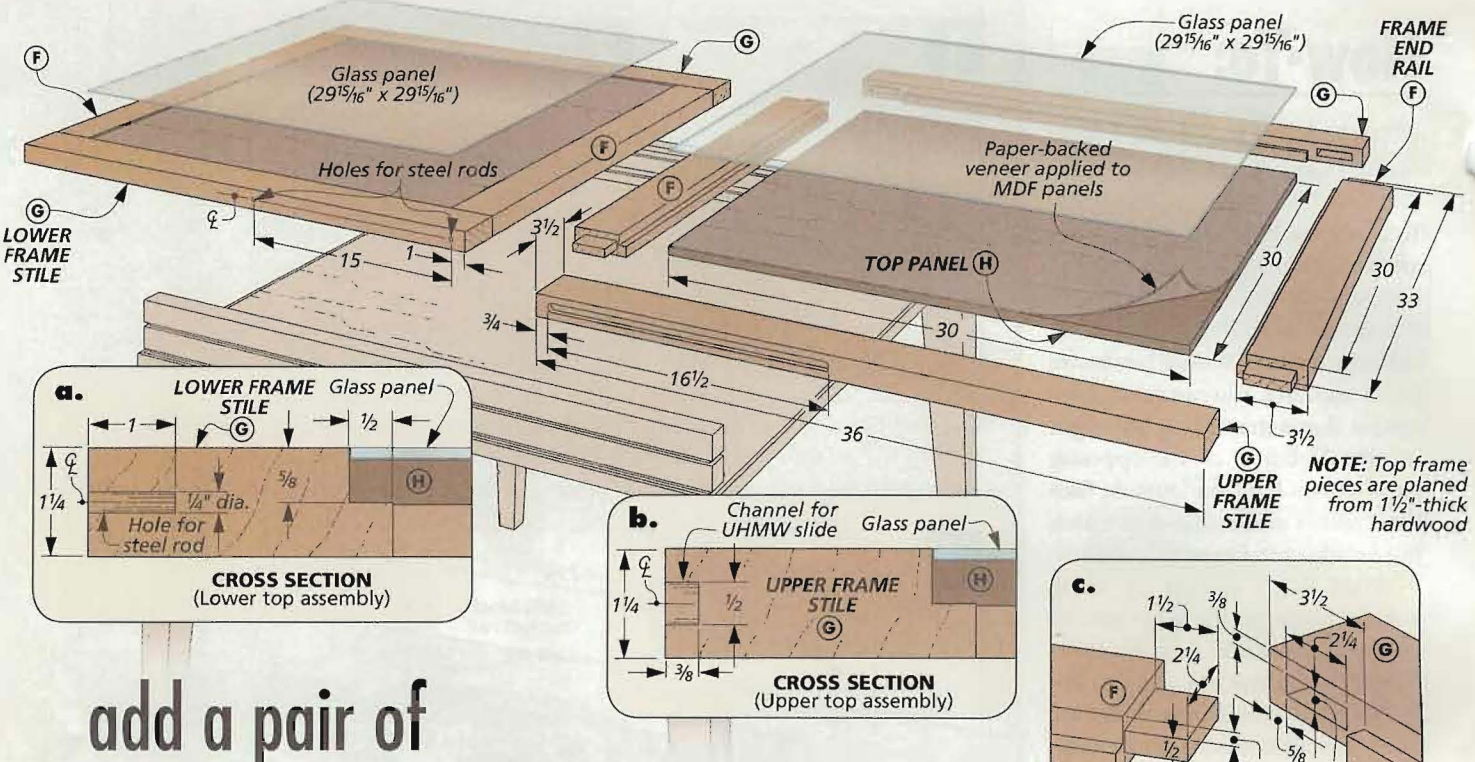

add a pair of SLIDING TOPS

Now that you've completed the legs and sub-top, you can turn your attention to the sliding top frames. As you can see in the drawing above, they're pretty straightforward to build.

I used ½" MDF for the panels because it's extremely flat and very stable — exactly the right material to use as a substrate for the veneer. And don't worry if you haven't worked with veneer before. The paper-backed veneer I chose for this project is easy to use. All you need are cauls, clamps, and a few extra pieces of MDF.

HARDWOOD FRAMES

To support the MDF panels, you'll need a pair of strong frames. That's why I decided to use 1¼"-thick stock with solid mortise and tenon joinery for the rails and stiles (detail 'c'). The hefty stock also reduces the chance of the frames flexing or twisting. A rabbet on the inside edge of the frames holds the panels and glass.

RABBETS & JOINERY. The box below walks you through all the steps of making the frame pieces. You can start by cutting the rabbet on the inside edge and then move on to the mortise and tenon joinery.

COMPLETE THE FRAMES. The frames will move in the guide rails on slides and rollers. So the next step

How-To: Preparing Frame Parts

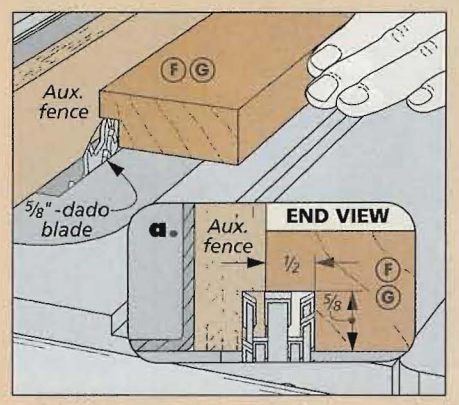

Rabbeting the Frame. *With an auxiliary fence covering part of the dado blade, rabbet the inside edge of the frame pieces.*

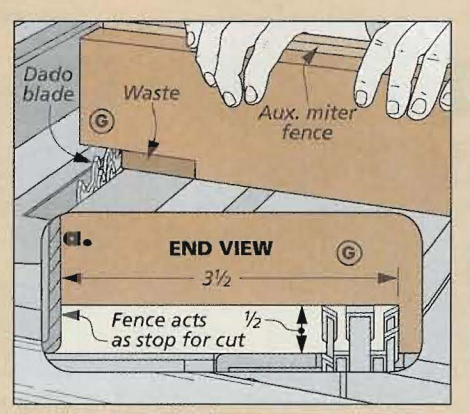

Square Stile End for the Mortise. *Use a miter gauge to hold the stiles and nibble away the tongue to fit the end rails.*

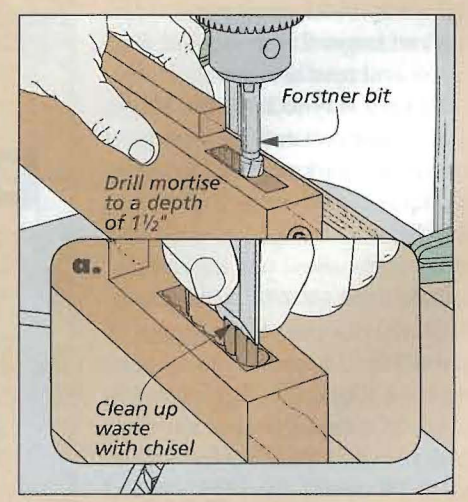

Drill and Clean Up Mortises. *Remove most of the waste at the drill press, then square the sides with a chisel.*

is to prepare the stiles for these parts that you'll add later. It's just a lot easier to work on the stiles now, before the frame is assembled.

First, you'll need to rout a groove on the outside edge of the stiles on the upper frame. This groove will hold the plastic slide that you'll attach later (detail 'b,' opposite page). To rout the groove, I used the same stop block technique as I did earlier for the guide rails. I chose UHMW for the slide because it's stable and has little friction.

The lower frame will ride on nylon rollers mounted on steel rods. So all you need to do is drill a couple of holes for the rods (detail 'a,' opposite page).

Now you're ready to assemble the frames. Since the MDF panels need to fit tightly inside the frame, it's important to keep the assembly square during the glueup.

Shop Tip: Veneer & MDF

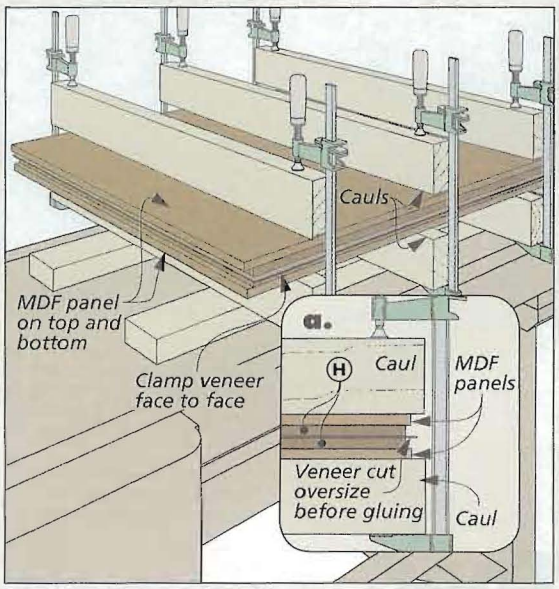

Clamping Veneer Using Cauls. *Use a couple layers of MDF to sandwich the panels. The MDF, along with stout cauls, will help keep the veneer flat.*

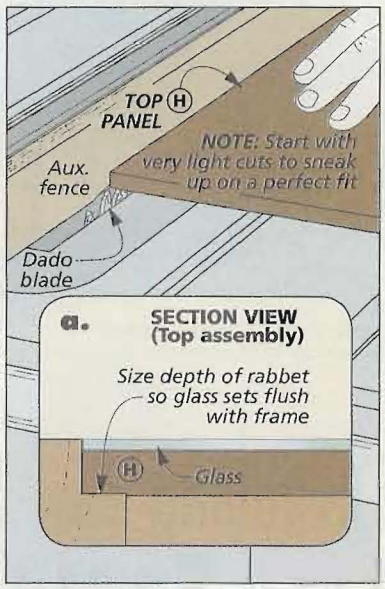

"Relief" Rabbet. *If the panel sits proud of the frame, just cut a shallow rabbet around the edge.*

VENEERED PANELS

With the frames complete, you can start working on the veneered MDF panels. I started by cutting them to rough size at the table saw. You'll find it's best to trim them to fit in the frame after applying the veneer. That way you can sneak up on a perfect fit.

While you're at it, now is a good time to cut a of couple of extra pieces of MDF to use as a press during the glueup. These extra pieces will help keep the veneer perfectly flat under clamping pressure.

VENEER CHOICE. I used a paper-backed veneer, because it's so much easier to work with than conventional sheets of raw veneer. A big advantage is you can use regular wood glue and have plenty of open time to adjust the position before it sets up. And the glue can't soak through and ruin the surface.

You can easily glue the veneer to the substrate using cauls and clamps. The illustration above shows you how to go about it.

TRIM TO FIT. When the glue is dry, you'll need to trim the panels to their final size. To do this, cut the panel to fit into the frame, sneaking up on a tight fit at the table saw.

The height of the finished panels should allow the glass to sit flush with the top. If the glass protrudes, you can lower the height by cutting a rabbet on the underside of the panel. Once you get the glass flush with the top, you can glue the panels into the frames.

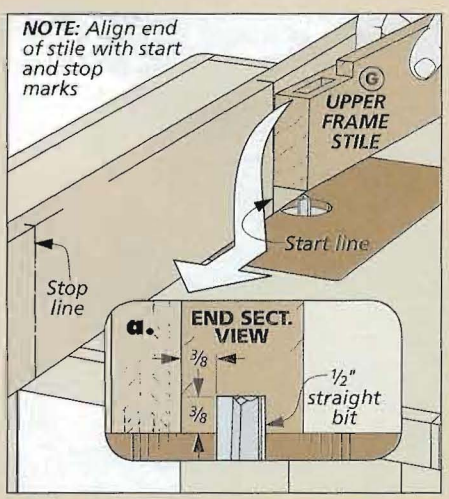

Routing Channel for Slide. *With the start and stop points marked on the fence, lower the stile onto the bit and rout the groove.*

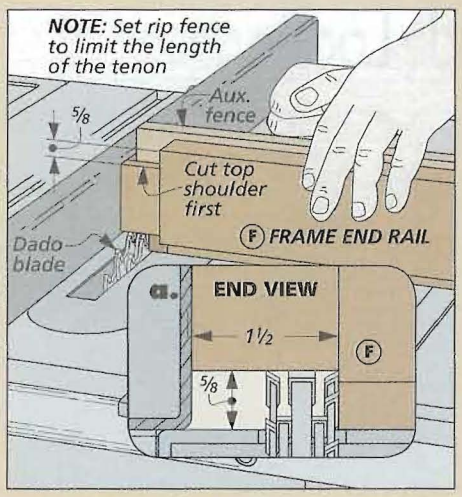

Cut the Shoulders. *Start forming the tenons by making the shoulder cuts using the dado blade and miter gauge.*

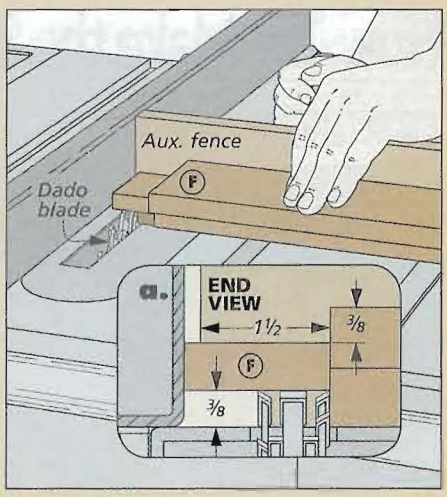

Finish with the Cheeks. *With the dado blade lowered, make the cheek cuts using the same fence setting and technique.*

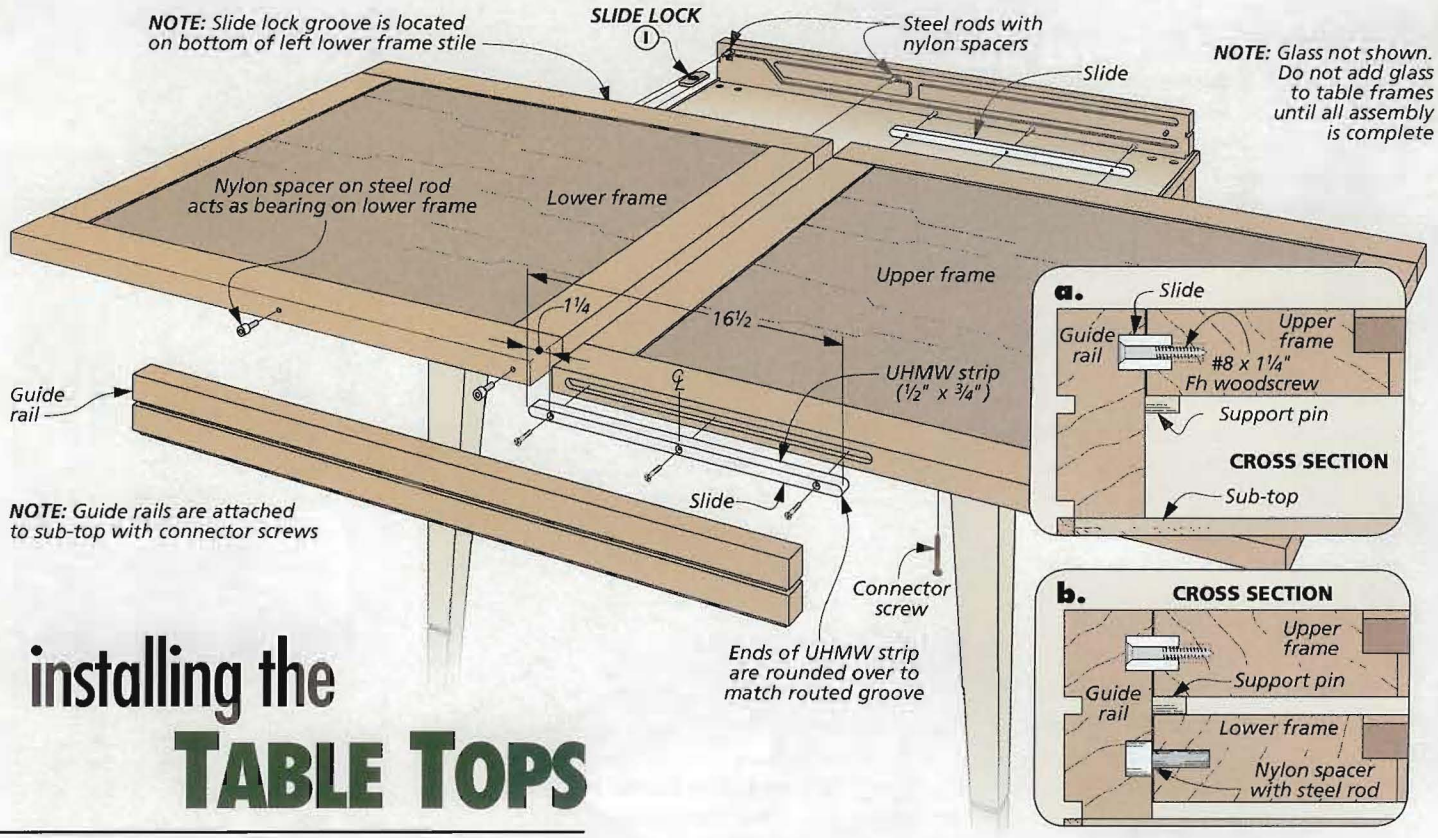

installing the TABLE TOPS

After completing the base, guide rails, and tops, you have a better understanding of how the sliding table works. The top frame only travels horizontally, so a straight slide is all it needs. But the lower frame needs a rolling mechanism to move out and then up through the vertical channels.

You'll also want a way to secure the frames in position when you pull them open, and that means installing a lock. Now it's just a matter of putting it all together.

ADD THE SLIDING PARTS. The first step in the final assembly is to add the UHMW slides to the upper frame. The slides fit into the channels you've already routed in the stiles.

After cutting the slides to size, you can round over the ends to fit into the grooves. Then secure them with three countersunk screws, as shown in detail 'a' above.

The lower frame has two shop-made "bearings" that ride in the grooves. They're just nylon spacers on steel rods. The rods only require a friction fit. The spacers will be trapped in position when the guide rails are in place (detail 'b').

LOCK AND MORTISE. Now the frames are almost complete. All that remains is to add a lock to hold them in place while the table is extended. And the idea behind this lock is simple. It's a sliding dovetailed key added to the lower frame. A pin on the key slides into a small mortise on the inside of the rail.

I started by laying out the shape of the lock on a thin piece of stock.

How-To: Make the Slide Lock

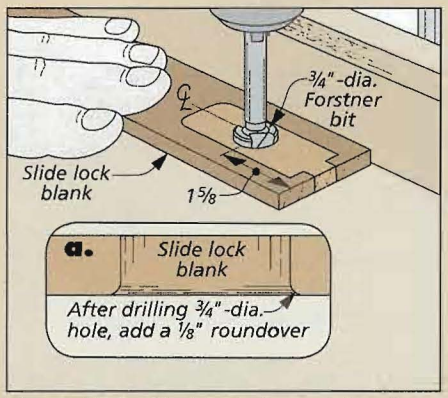

Finger Hole. *Start by laying out the shape of the lock on a piece of ¼" stock. Then drill the finger hole using a Forstner bit.*

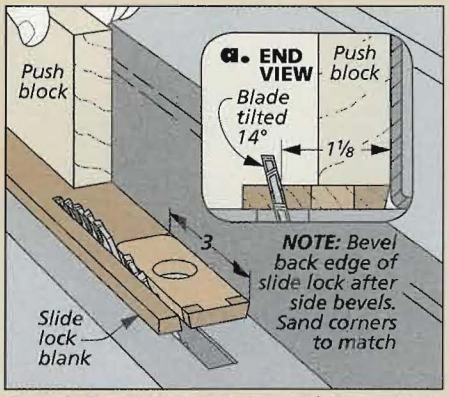

Bevel the Sides. *Set the table saw blade to 14° (to match the dovetailed slot) and cut the workpiece to width.*

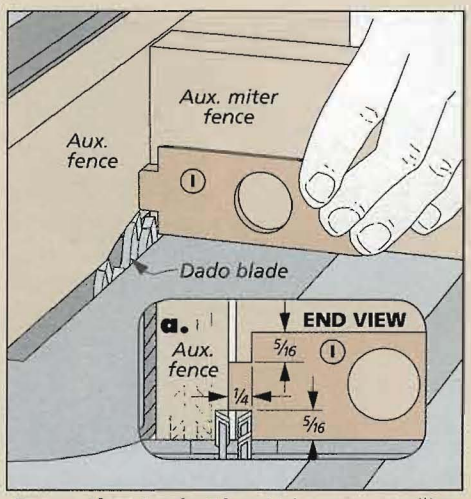

Form the Lock Pin. *Using an auxiliary fence on the miter gauge, nibble away the waste to form the pin on the slide.*

The box at the bottom of the opposite page will show you the rest of the process for making the lock.

The lock fits into a dovetailed slot on the stile. Making this slot isn't too difficult. After marking the position, all you need to do is clamp a pair of guide blocks to the workpiece and rout the slot.

The illustrations at right outline the steps of laying out and cutting the matching mortise. The thing to remember here is to make sure the frames are in the extended position (meeting in the middle).

ASSEMBLY. After applying a finish to all the parts, you can begin putting everything together. Start by attaching one of the guide rails with connector screws. Next, position the upper and lower frames in the guide rails, using spacers as needed to hold them in place. Now fit the other guide rail to the frames and attach it to the base.

After adding the glass to the tops, the table is complete. And since it will slide closed to fit just about anywhere, I'm sure you won't have any trouble finding a suitable home for it. W

How-To: Fit the Slide Lock

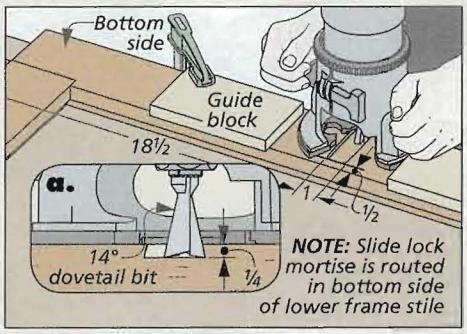

Routing Guide for Slide Lock. *Clamp a pair of guides to the workpiece to gauge the width of cut for the dovetailed slot.*

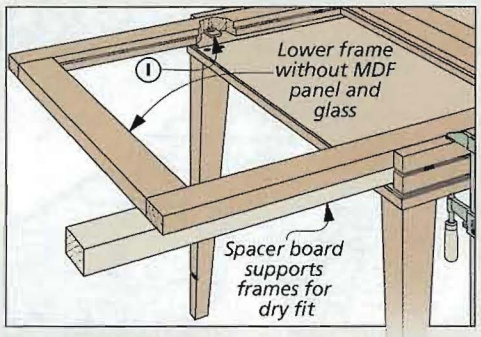

Dry Fit the Assembly. *Using spacer boards to support the frames, test fit the frames by clamping the guide rails in place.*

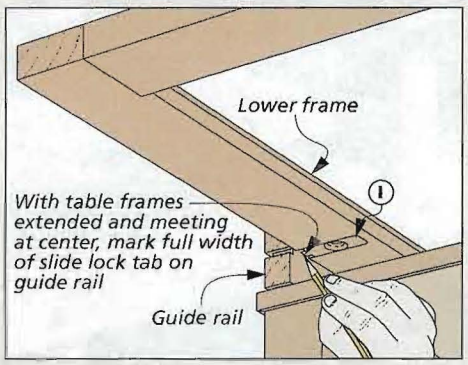

Locate the Slide Lock Mortise. *With the top extended, mark the location where the pin of the lock meets the guide rail.*

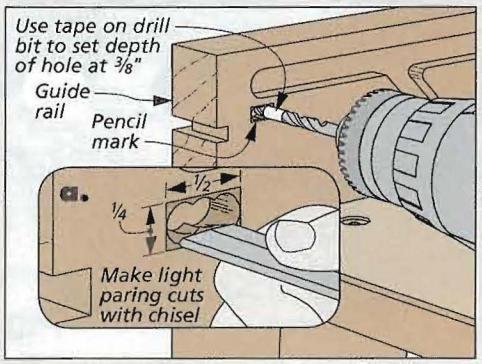

Cut the Mortise. *First, drill a couple of holes to remove the bulk of the waste, then square up the sides of the mortise with a chisel.*

Materials, Supplies, & Cutting Diagram

A	Legs (4)	3 x 3 - 26
B	Sub-Top (1)	¾ ply. - 36 x 38½
C	Front Edging (2)	¼ x ¾ - 39
D	Side Edging (2)	¼ x ¾ - 36½
E	Guide Rails (2)	1¼ x 3 - 36
F	Frame End Rails (4)	1¼ x 3½ - 33
G	Frame Stiles (4)	1¼ x 3½ - 36
H	Top Panels (2)	¾ MDF - 30 x 30
I	Slide Lock (1)	¼ x 1⅛ - 3

- (16) 7 x 70mm Connector Screws
- (8) 7 x 50mm Connector Screws
- (4) ¼" x 1¼" Steel Rod
- (4) ½"OD x ¼"ID - ⅜" Nylon Spacers
- (2) ½" x ¾" - 16½" UHMW Strip
- (2) 29 15/16" x 29 15/16" Glass Panels (⅛"-Thick)
- (6) #8 x 1¼" Fh Woodscrews
- (2) ¼"-dia. x 1½" dowels

¾" - 48" x 48" Birch Plywood

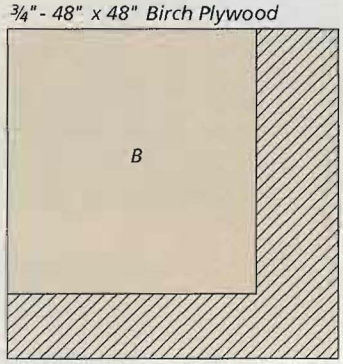

3½" x 3½" - 36" Hard Maple Turning Blanks (Four Needed)

¾" x 1½" - 96" Hard Maple (1.0 Bd. Ft.)

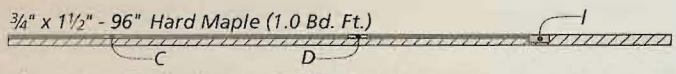

1½" x 3½" - 96" Hard Maple (4.7 Bd. Ft.)

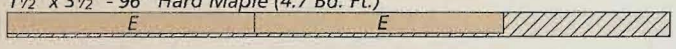

1½" x 4" - 72" Hard Maple (2 boards @ 4 Bd. Ft. each)

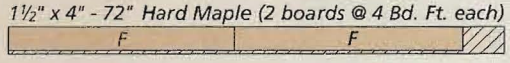

1½" x 4" - 96" Hard Maple (2 boards @ 5.3 Bd. Ft. each)

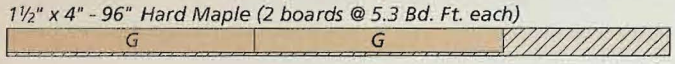

¾" - 48" x 96" MDF

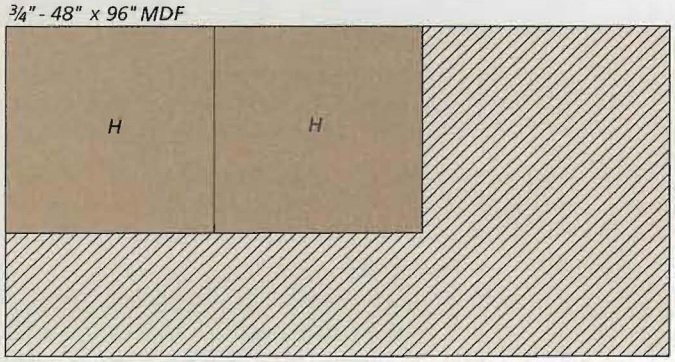

solid oak Chaise Lounge

This project is packed with good looks and comfort. With its solid design, it's sure to be a favorite lounging spot for years to come.

Relaxing by the pool or on the backyard deck is a favorite pastime when the weather is warm. And the chaise lounge you see above provides the perfect place to soak up some sun. Not only is it a great-looking project, but its design makes it a piece of furniture built to last.

SOLID DESIGN. Everything on this project is designed for durability and comfort. The frame is built to provide support for the sturdy seat and backrest panels on top.

MOBILITY. The large wheels make it easy to move the lounge around. Their clever design uses a standard V-belt as the "tire."

ADJUSTABLE COMFORT. This lounge has all the features you need to relax in style. For example, you can adjust the backrest up or down and lock it in a variety of positions. (You could even add a set of cushions to make it even more restful.)

Another nice touch is the slide-out tray stored underneath. It provides a handy place to keep your favorite beverage within reach.

LONG-LASTING. I chose white oak for the construction because it stands up well to the elements. And spar varnish gives it plenty of protection for years of summer siestas.

The best part is, you can use your woodworking skills to build a project that will be the most popular seat around. And it's also a perfect complement to the patio cart in *Woodsmith* No. 165.

CONSTRUCTION DETAILS

OVERALL DIMENSIONS:
30¼"W x 78"L x 19⅝"H
(Reclined)

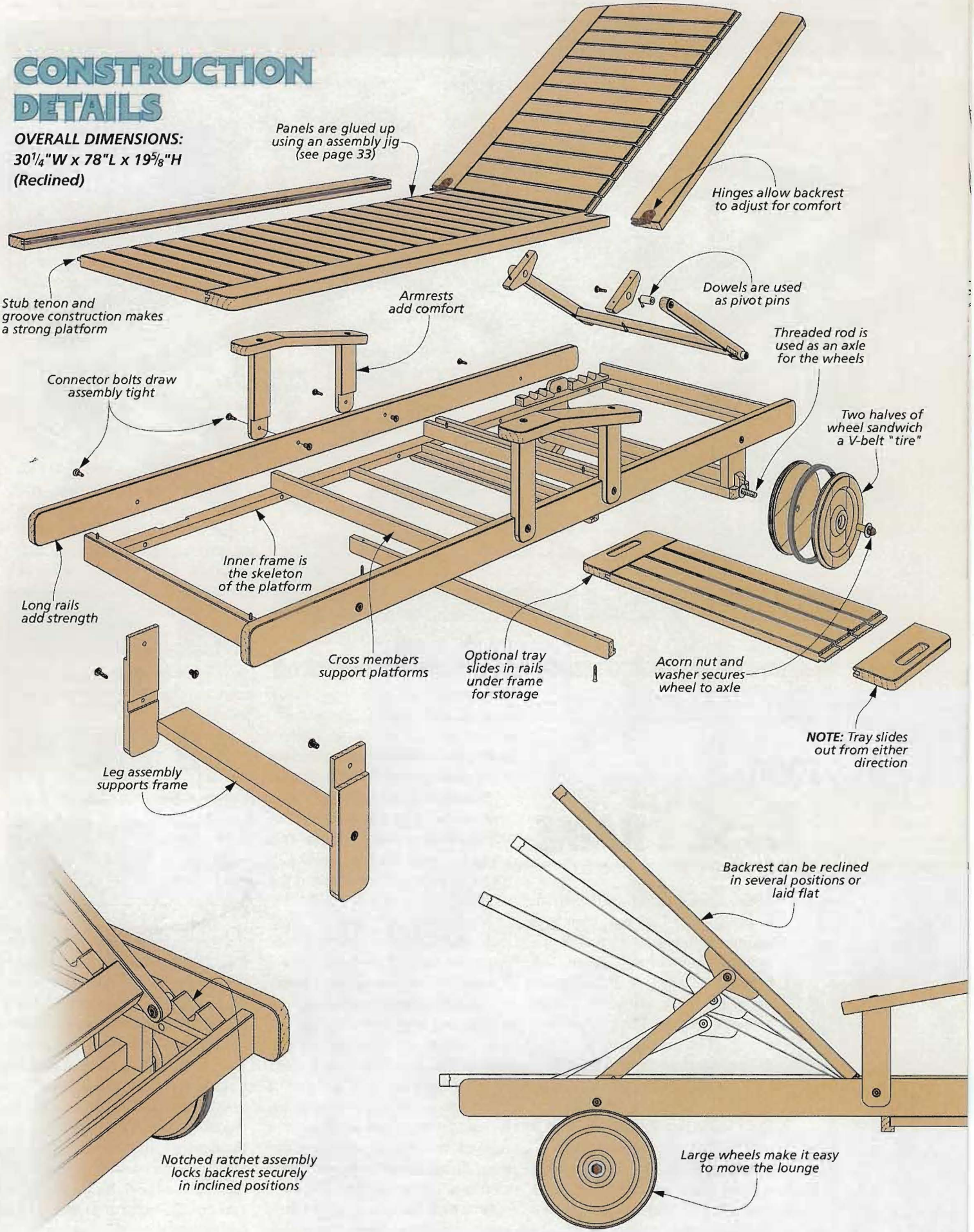

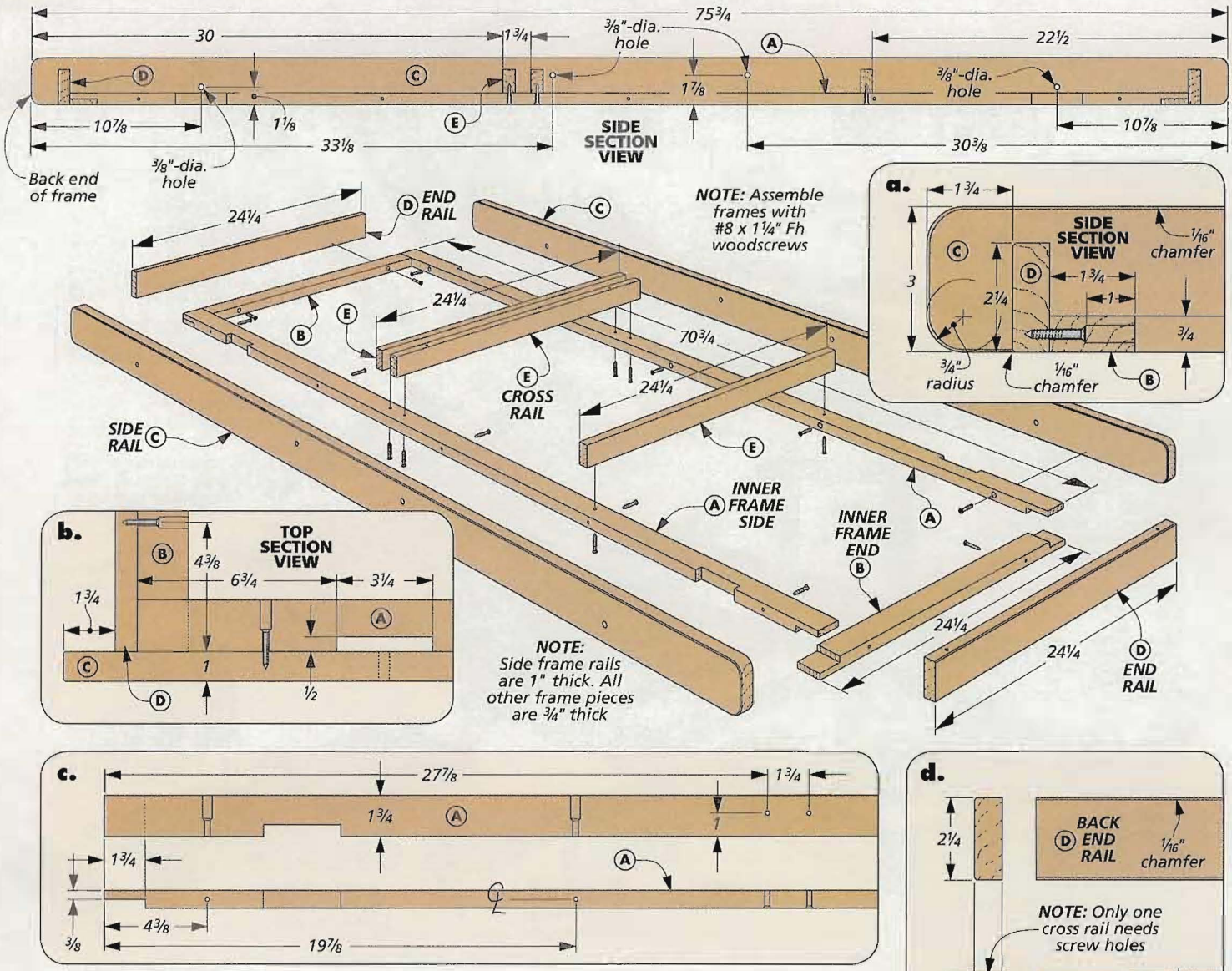

a strong BASE FRAME

When you look at how this lounge is built, you can see there's a strong "undercarriage" that forms the base frame of the lounge. The base frame starts with an inner assembly with cross rails that support the backrest and seat panel. This assembly also holds the front legs and rear wheels.

Outer side and end rails tie it all together. They add strength and good looks to the base frame. But you'll start from the inside out.

INNER ASSEMBLY. In the drawing above, you'll see how the inner frame sides and ends lay flat. They're joined at the corners with half laps because they provide a lot of glue surface for strength.

After cutting the half laps on the side and end pieces, you can cut the notches where the rear axle assembly and front legs will slip into place. Now, head over to the drill press and drill the holes for fastening the outer frame and cross rails. (See the box on the opposite page for help with these tasks.) Finally, you can assemble the frame using waterpoof glue, making sure everything is square.

I want to mention something about the glue I used. I used *Franklin International's Titebond III* for this project since it's waterproof. It has a little longer set time than regular wood glue, which gives me a little extra time to get things clamped in place during glue-up.

OUTER RAILS. Next, you can add the outer rails to the inner frame (see drawing above). Once you cut the four frame pieces to size, cut the rounded corners on the ends of the side rails. The only things left to do are drill the holes and rout the chamfers on the edges (detail 'd'). Then you can fasten the rails to the inner frame with woodscrews.

CROSS RAILS. The last step to completing the frame is adding the three cross rails. They sit on top of the inner frame and fit between the side rails of the outer frame. After you drill the holes and chamfer the edges, just screw them in place.

adding the FRONT LEGS

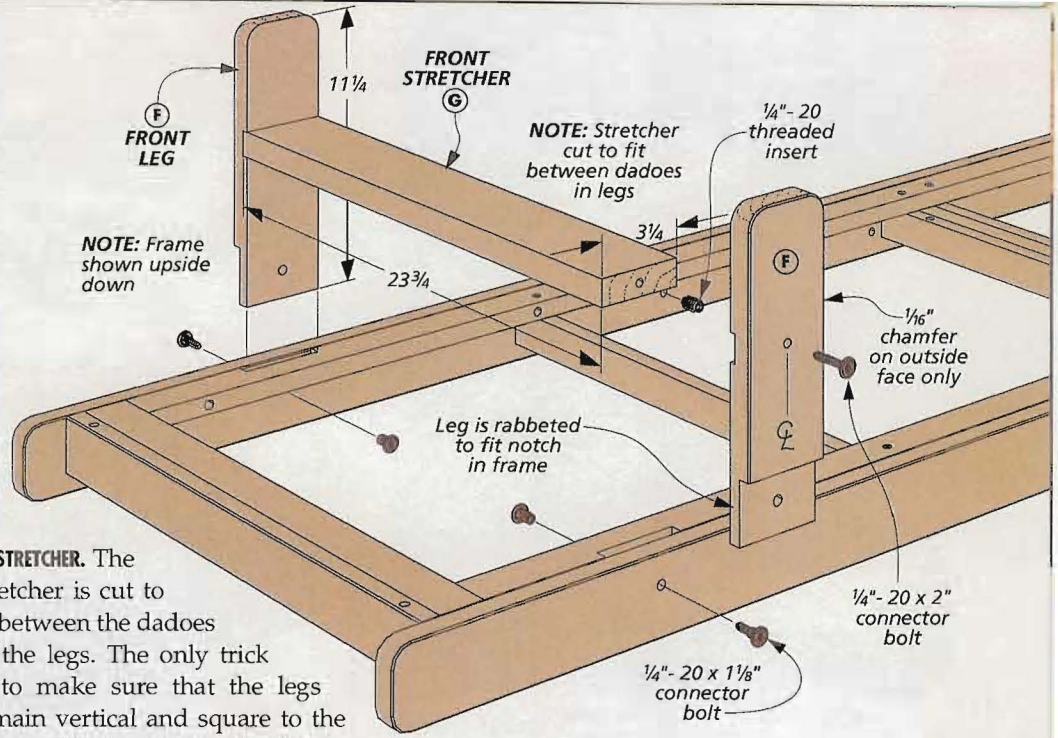

The next items to work on are the parts that make up the front leg assembly. To make things easier to access and assemble, you'll want to turn the frame upside down.

LEG ASSEMBLY. The front leg assembly is made up of two legs and a horizontal stretcher. The drawing on the right shows you how the entire assembly slips into the notches in the frame you made earlier. The leg assembly is held securely with connector bolts and glue. Making the two leg pieces will be the first task.

LEGS. When cutting the legs to width, I aimed for a snug fit in the notches of the inner frame. And if you look at the drawing, you'll notice that the upper ends of the legs have a long, wide rabbet that forms a tongue. The goal is to size the thickness of these tongues to fit snugly into the notches.

Once you get a good fit, you can remove the legs and cut the dadoes for the stretcher. Then it's just a matter of cutting the radius on the bottom corners and chamfering the edges of the legs. Next, slip the legs into place and temporarily clamp them so that you can measure for the length of the stretcher.

STRETCHER. The stretcher is cut to fit between the dadoes in the legs. The only trick is to make sure that the legs remain vertical and square to the frame with the stretcher in place.

ASSEMBLY. With the legs and stretcher in place, you need to drill the holes for the connector bolts (see details 'a' and 'b' at right). I used a hand drill with a guide block to help keep the drill bit square to the legs. Then you can remove the stretcher and drill the holes in the ends for the threaded inserts before assembly.

When all that's done, you're ready to fasten the legs to the frame. A little glue and a connector bolt holds the leg to the frame. Some glue and another connector bolt fastens through the leg into the threaded insert in the stretcher.

Now you can move on to building the rear axle assembly complete with wheels.

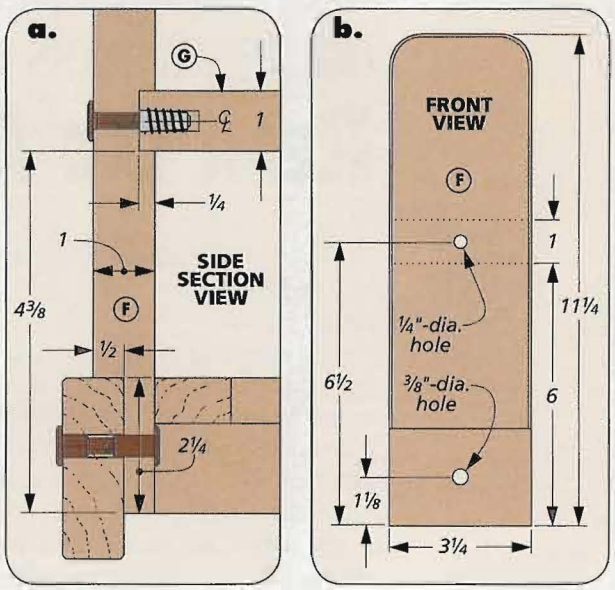

How-To: Half Laps, Notches, and Countersunk Holes

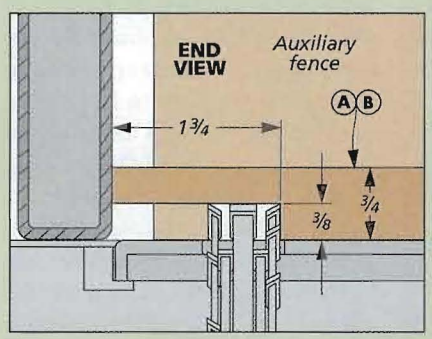

Half-Lap Joinery. *Use a scrap piece to adjust the blade height. You're aiming for flush joints of the frame pieces.*

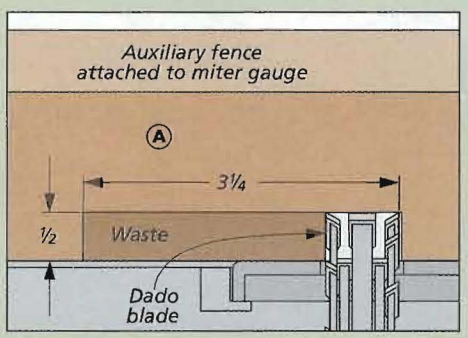

Cutting Notches. *Accurate layout lines and an auxiliary fence will help you cut the notches for the legs in the inner frame.*

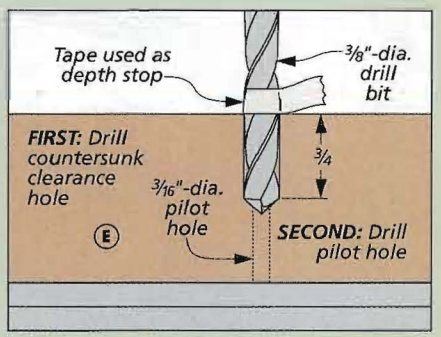

Countersink and Drill Through. *Drill the countersink first. This helps center the bit when drilling the pilot holes.*

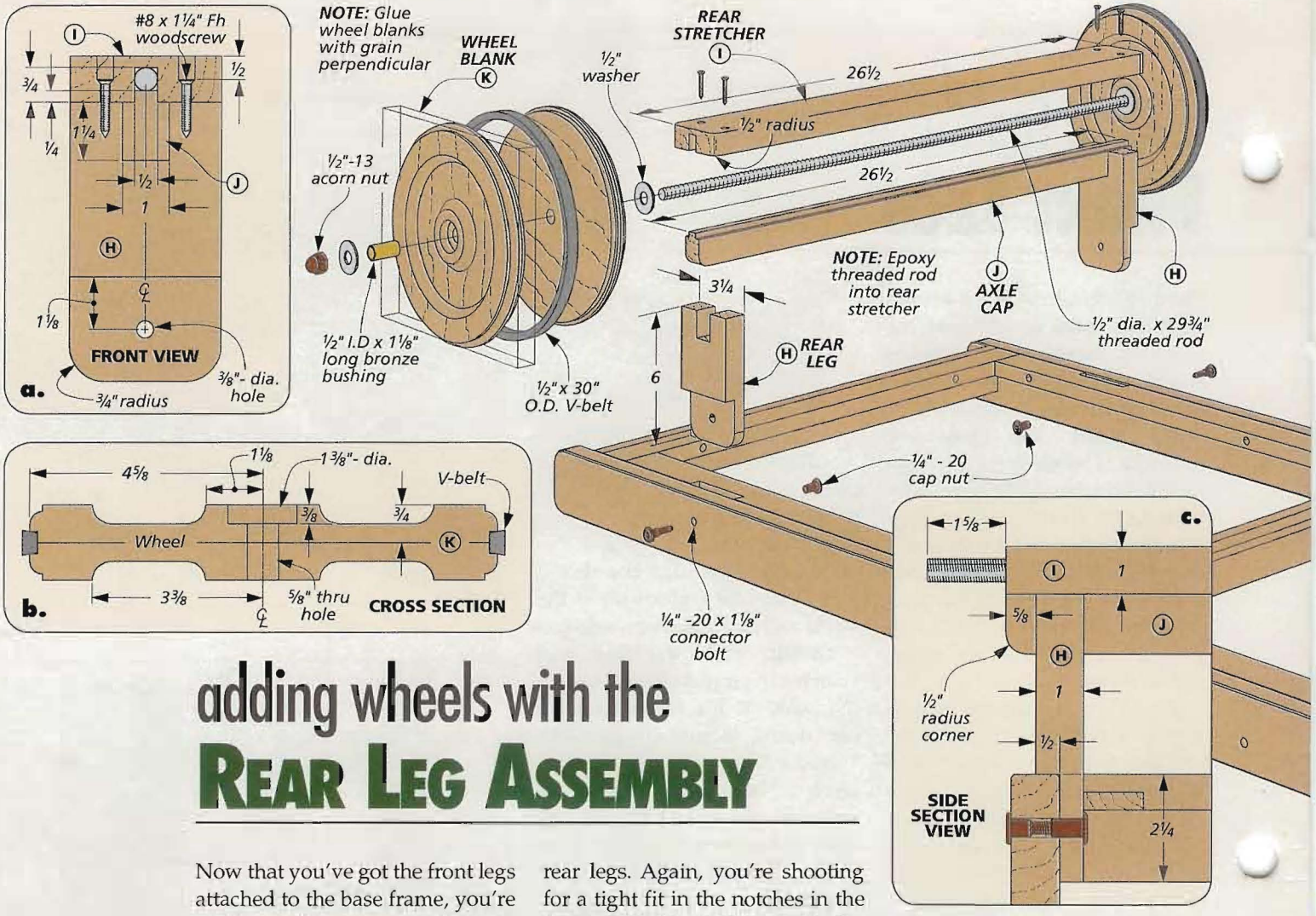

adding wheels with the REAR LEG ASSEMBLY

Now that you've got the front legs attached to the base frame, you're ready to move on to the rear wheel assembly. Like the front legs, the rear legs fit into notches in the frame. But instead of being connected with a simple stretcher, you'll make an axle assembly and two wood wheels.

REAR LEGS. The main drawing above and detail 'a' show you what you need to know to make the rear legs. Again, you're shooting for a tight fit in the notches in the frame. As you can see, you'll also need to cut a notch to hold the axle assembly. (See the box below for a tip on how to do this on your table saw with a dado blade.)

BUILD AN AXLE. The axle assembly shown above is made up of three main parts. There's a rear stretcher with a groove cut down the center of its length. This groove holds the threaded rod axle. Then, to top off the axle, there's a cap piece. The axle cap is rabbeted along two edges to form a tongue. The tongue fits the groove in the bottom stretcher and sandwiches the steel axle to hold it secure. The box at left shows how to cut the tongue.

When it came time to put everything together, I left the threaded rod for the axle a little long. That way, I could trim it to final length after I built the wheels. I epoxied the rod into the groove in the rear stretcher and glued the axle cap in place. After the epoxy cures, just fasten the legs to the frame, then screw the axle assembly to the legs, as shown in the drawing above. The wheels come next.

WHEELS. The last thing to do before you can flip the frame right side up to work on the seat is make the wheels. The box on the opposite page will help you out. You'll be using your router and a custom trammel jig to shape the wheels.

How-To: Axle Construction Details

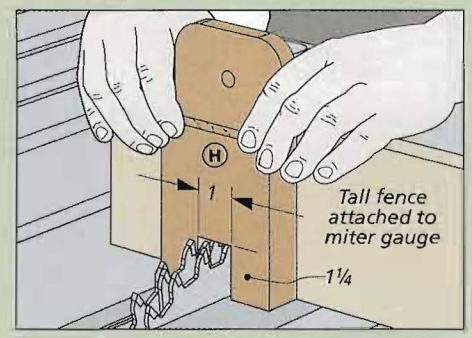

Notches. *A couple passes over a dado blade is all it takes to make the notch in the rear legs for the axle assembly.*

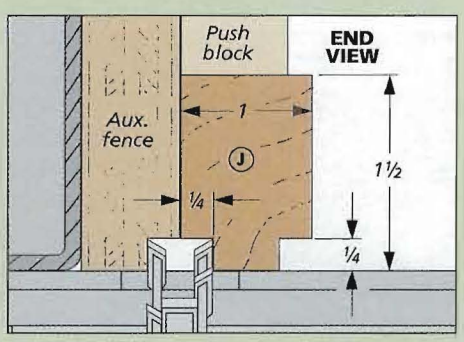

Axle Cap. *Use a dado blade buried in an auxiliary fence to cut the rabbets on the axle cap that form the tongue.*

using a router to make WOOD WHEELS

Making the wheels for the chaise lounge is really a small project in itself. You can see the wheel take shape as you make a series of cuts with your router using a simple circle jig. (See Shop Notebook on page 33 to build the jig.)

STEP-BY-STEP. The drawings below and detail 'b' on the opposite page will show you what you need to know to make the wheels. Each wheel is made up of two identical blanks that form the "rim" of the wheel. Then the wheel blanks are glued together with a V-belt between them to make a "tire."

GLUE UP BLANKS. The first thing you need to do is glue up four blanks (two for each wheel). Then you can mark and drill the center holes for the centering pin of the circle jig, as shown in Step One.

BACKER BOARD. The next thing to do is cut a piece of plywood larger than the wheel blank to use as a backer board. You'll screw the wheel blank to this backer before routing the wheels to shape. To make things go quicker, I used four separate backer boards (one for each wheel blank). I drilled a ⅝"-dia. hole in the center of the backer board to hold the pivot pin on the jig (see Step Two below).

A SERIES OF CUTS. With the backer board and wheel blank clamped to your bench, you can start routing. The first thing to do is cut the wheel to size (Step Two). The next step is to cut a channel for the V-belt tire (Step Three). Then flip the blank over to rout the coved section of the wheel (Step Four). Finally, in Step Five, use a roundover bit to complete the edge profile.

Now to complete each wheel, you can glue up the two blanks (making sure to sandwich the V-belt in between them).

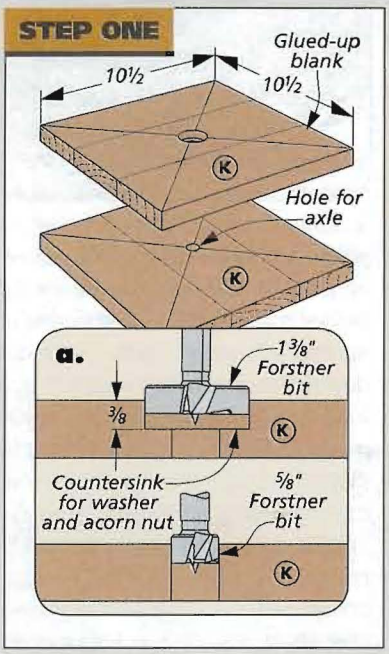

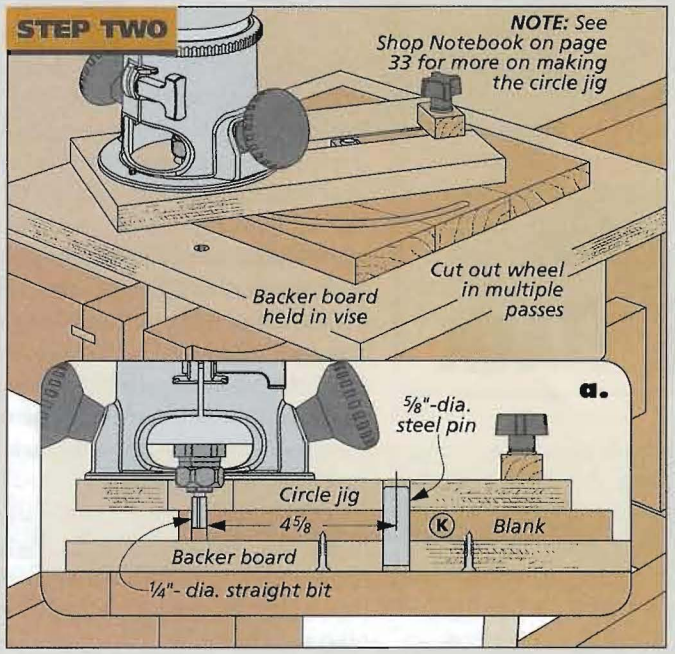

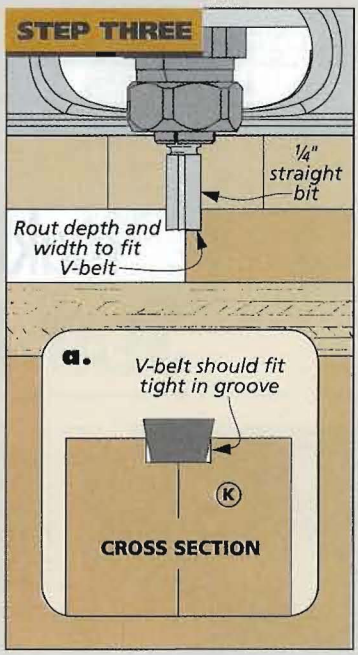

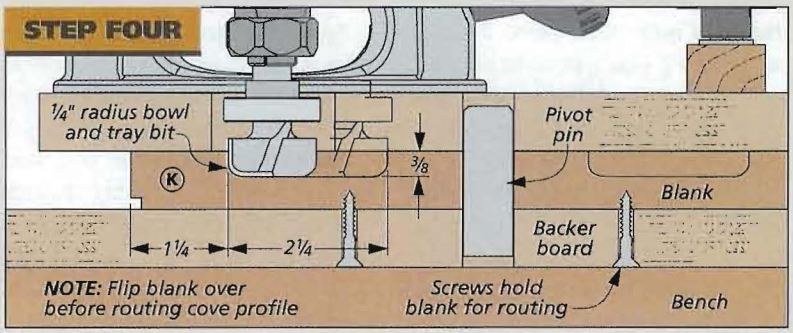

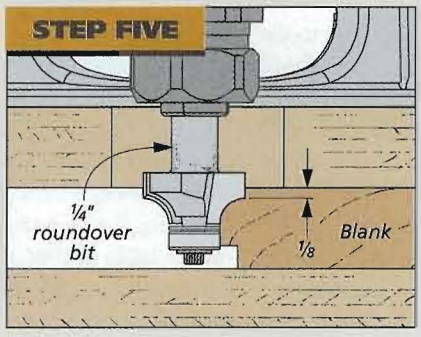

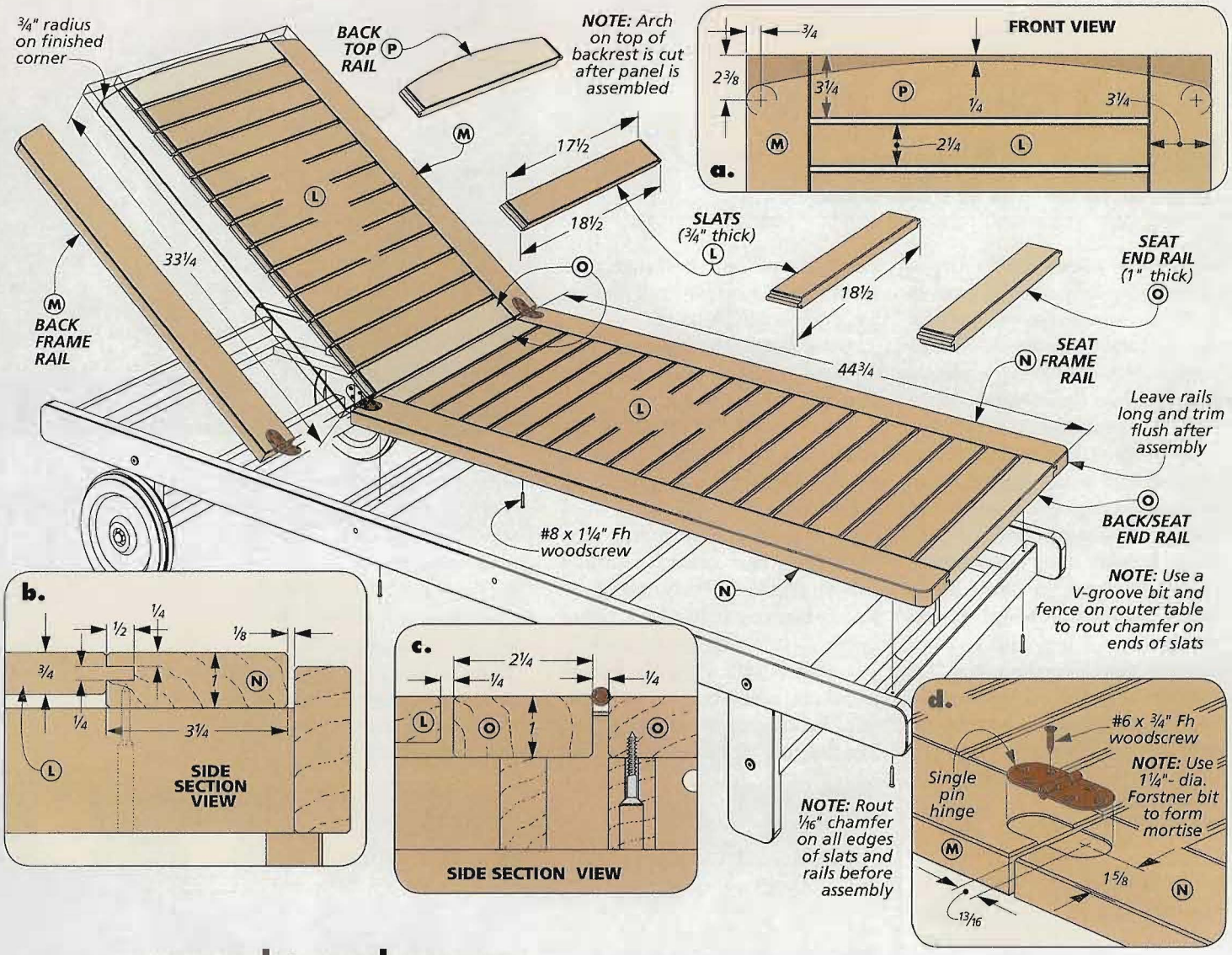

making the SEAT & BACK

An assembly jig helps keeps the slats spaced properly. See Shop Notebook (page 33).

With the frame of the lounge complete, the next thing to do is make the seat and the backrest panels. Both are made from a number of slats surrounded by a frame. The slats have a stub tenon on each end that fit into a groove in the side rails. You'll cut all the slats first so you'll have them on hand later.

SLATS. The first thing to do is cut all of the slats to size. Then cut a centered stub tenon on each end, as shown in detail 'b.' Finally, move to the router table and rout a chamfer on all the edges and the tenon shoulders at the ends.

FRAME RAILS. Now it's time to concentrate on making the frames for the back and seat panels. There are a couple of things I need to point out. First, I left the rails a little long so I could trim them flush after the panels were assembled. And if you look at detail 'b' above, you'll see that the frame rails are 1" thick while the slats are only 3/4" thick. To make the slats sit flush with the top of the rails, you need to cut an off-center groove in the side rails.

OFFSET TENONS. There's one more thing to note here. Since the rails are 1" thick, you'll need to make an offset tenon at each end of the end rails so that the top face is flush with the slats and side rails.

PANEL ASSEMBLY. With the groove cut in all the rails, rout the chamfers on the inside edges and assemble the panels. To help with glueup, I built the jig shown in the margin photo at left. (See Shop Notebook on page 33.) Now you can cut the arched top of the backrest and trim all the rail ends flush. (You can do this on your table saw using a long auxiliary fence on the miter gauge.) Finish up by cutting a radius on the corners, then rout the chamfers on the edges.

HINGE INSTALLATION. Once the backrest and seat are complete, you can connect them with a pair of hinges (details 'c' and 'd'). A Forstner bit helps create the shallow mortises.

Now you can fasten the seat and back assembly to the frame. Then you'll work on the mechanism for the reclining backrest.

RATCHET ASSEMBLY. Before you start on the ratchet assembly, a little explanation is in order. The main drawing on the opposite page will help make everything clear and show how it all works together.

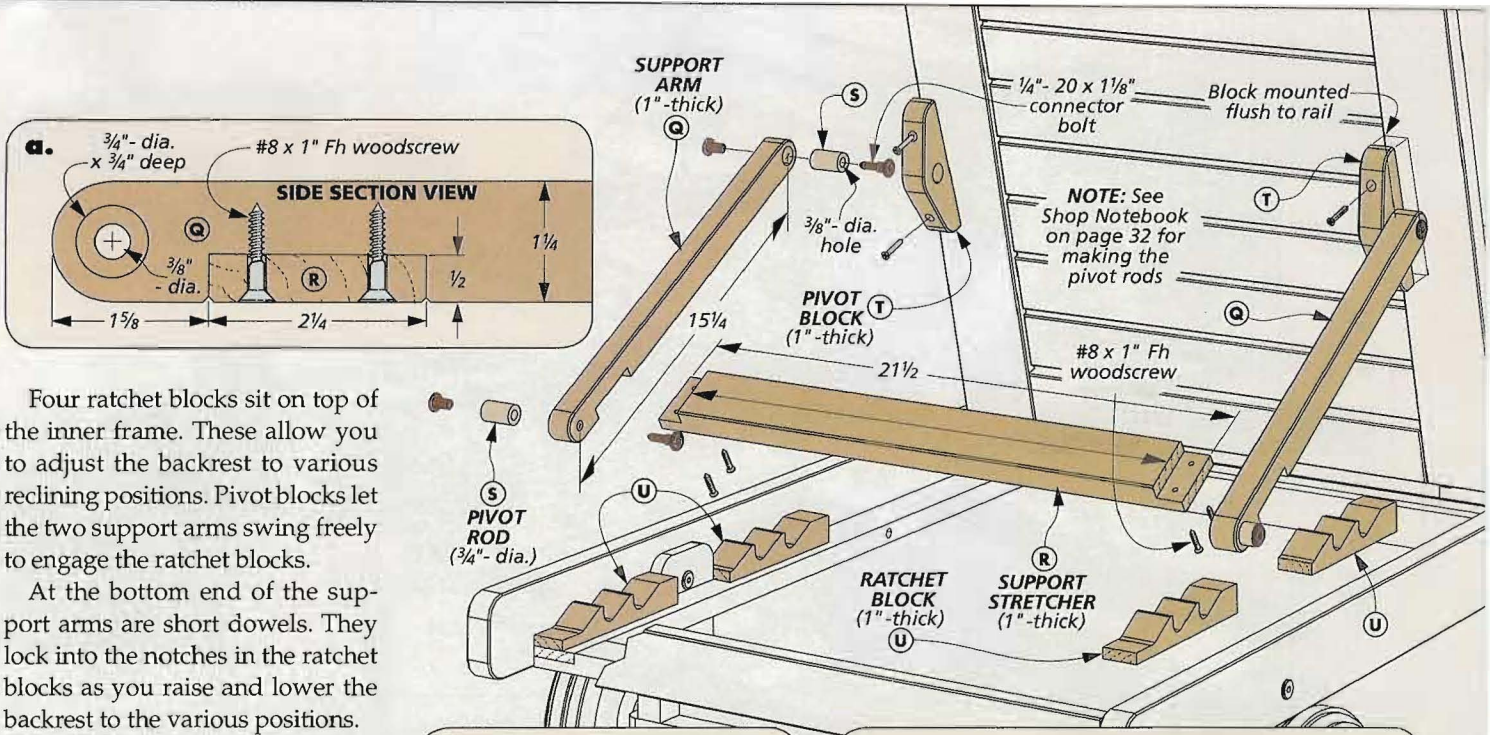

Four ratchet blocks sit on top of the inner frame. These allow you to adjust the backrest to various reclining positions. Pivot blocks let the two support arms swing freely to engage the ratchet blocks.

At the bottom end of the support arms are short dowels. They lock into the notches in the ratchet blocks as you raise and lower the backrest to the various positions.

RATCHET BLOCKS. I started with the four notched ratchet blocks. The box at the bottom of the page shows you an easy way to make them. (Note that the two blocks that sit in front of the rear leg assembly are shorter.) Then you can glue the blocks in place and work on the pivot assembly.

PIVOT BLOCKS. Details 'c' and 'd' show you the dimensions and where to attach the pivot blocks. I found it easier to drill screw holes in the square blanks before cutting them to shape on the band saw.

SUPPORT ARM ASSEMBLY. The support arms are notched and connected by a stretcher. The pivot rods at each end of the support arms are "countersunk" and attached with glue and connector bolts for strength (detail 'b'). To make assembly easier, I installed the arms (with pivot rods attached) into the pivot blocks before fastening the stretcher between them.

The armrests and tray are next and are the finishing touches.

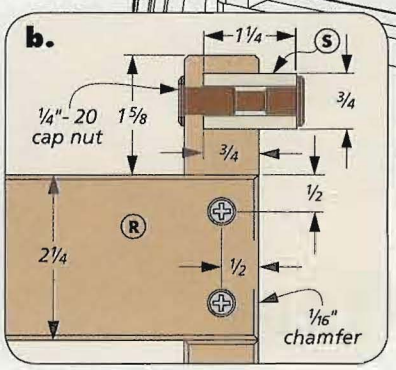

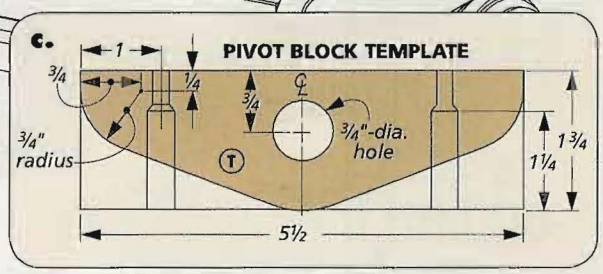

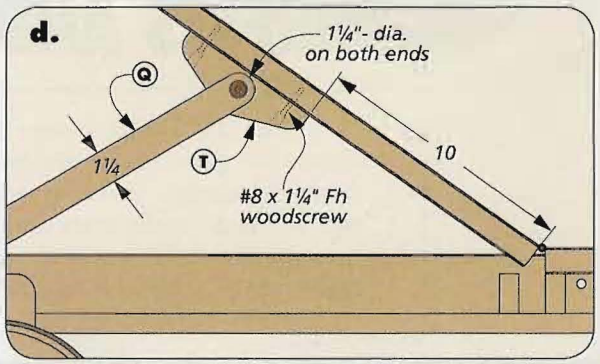

How-To: Make the Ratchet Blocks

The ratchet blocks are easy to make using your drill press and band saw. All you need to do is cut the blanks to size and lay out the notches as shown below. A Forstner bit in the drill press makes quick work of removing the bulk of the material. Then you can do the final shaping at the band saw. A little sanding with a drum sander will remove saw marks.

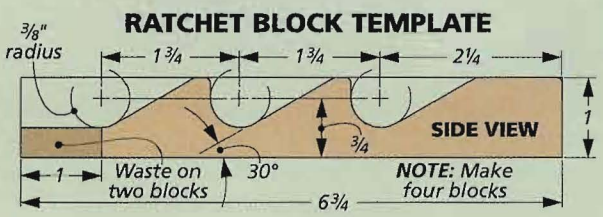

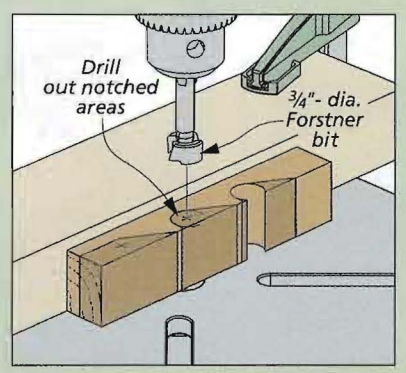

Drilling. *Use a fence to help align the holes that will form the notches in the ratchet blocks.*

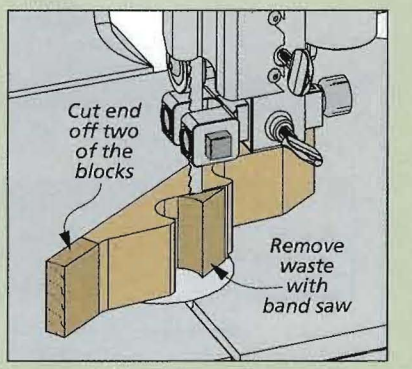

Shaping. *A band saw will help you remove the waste material from each notch before final sanding.*

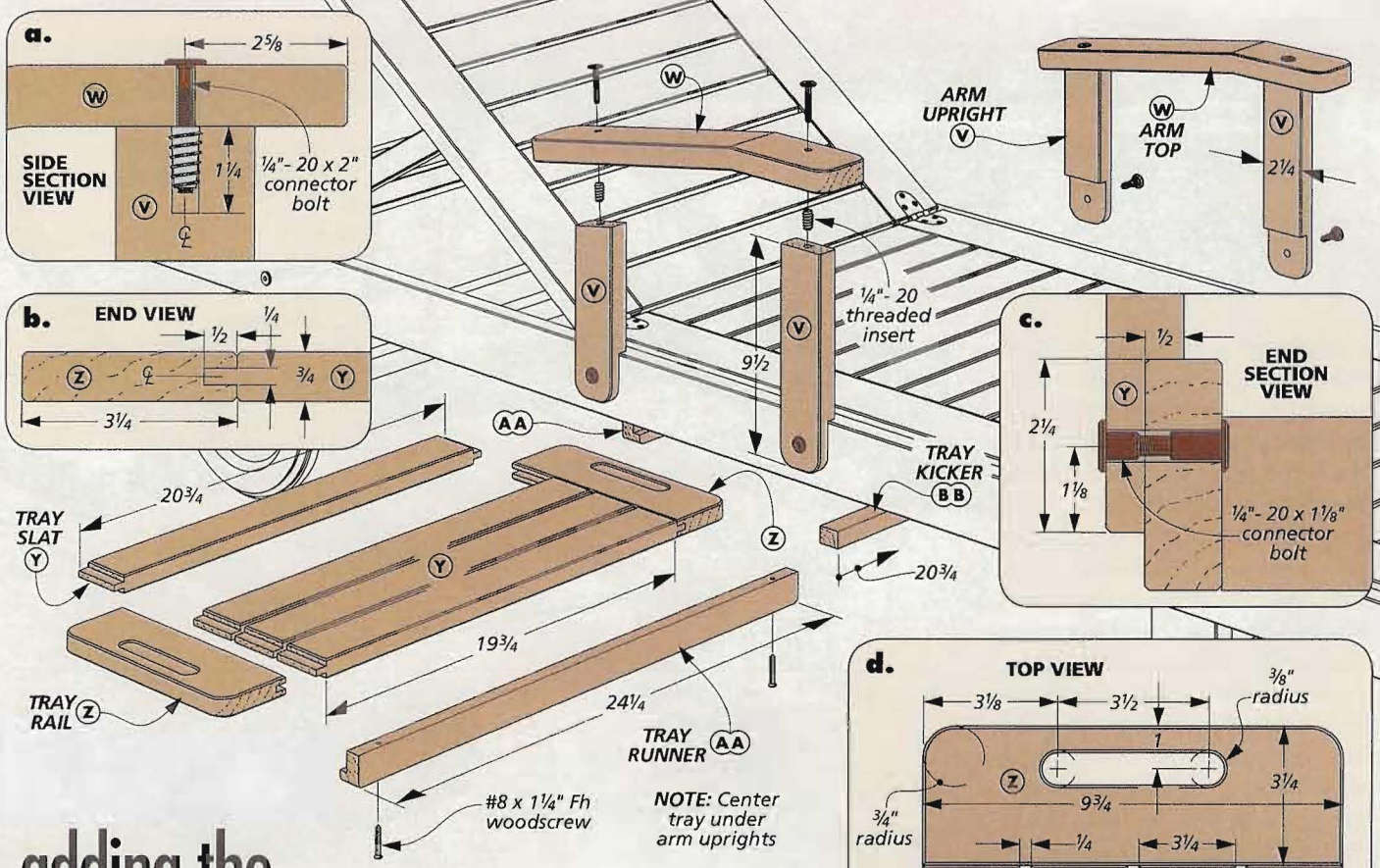

adding the ARMRESTS AND TRAY

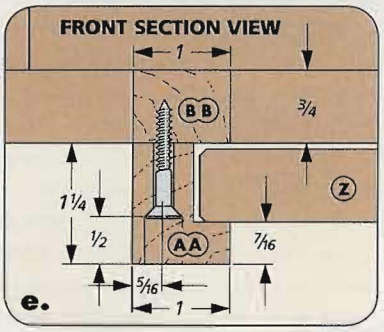

Now that the chaise lounge is almost complete, there are two finishing touches you can add that will really make it stand out from the crowd. The armrests and handy slide-out tray are all about comfort and convenience.

ARMRESTS. In the drawing above, you can see how each armrest sits on two uprights. Tongues on the uprights fit over the rails. And the armrests are angled to provide a more comfortable resting position. The box below shows you how to

How-To: Armrests and Sliding Tray

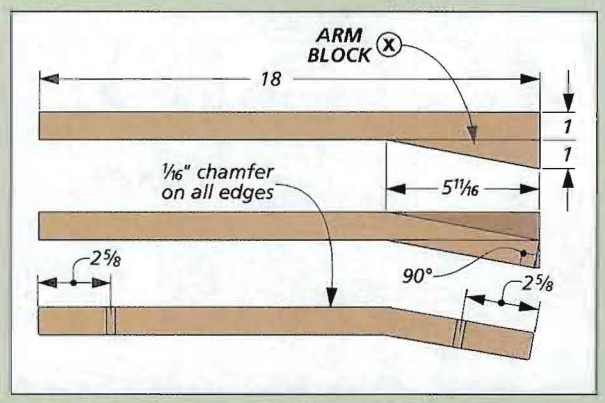

Glue, then Cut. *To create the angled armrests, glue a wedge-shaped block under the arm blank. Then remove the waste at the band saw to create the angled profile.*

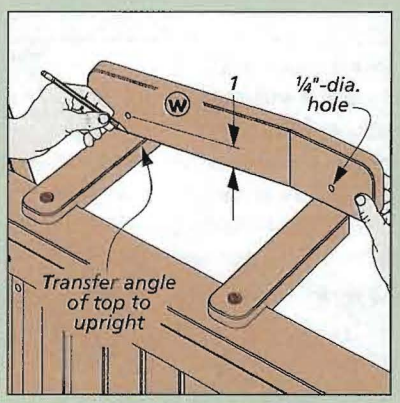

Scribe and Fit. *Temporarily install the uprights and scribe the angle on the rear upright for a tight joint.*

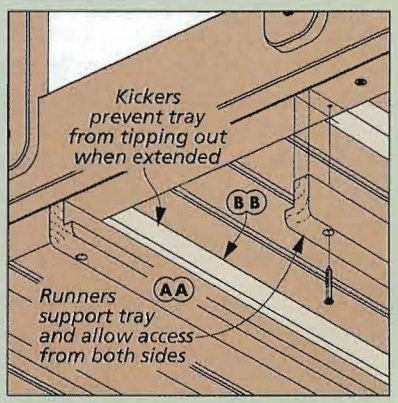

Tray Runners. *Runners are positioned under the armrests and are spaced to fit the tray.*

make and fit the armrest assemblies before you attach them to the frame of the lounge.

Now you'll want to pay particular attention to fitting the armrest tops to the uprights. Once the arm tops and uprights are cut to fit, you can secure them in place with glue and connector bolts, as shown in the main drawing.

SLIDING TRAY. The chaise lounge at this point is nearly complete. The last thing to do is make the sliding tray you see in the photo at right. The drawing on the opposite page shows how the tray, kickers, and the two runners are put together.

TRAY ASSEMBLY. Like the seat, the tray is made up of slats and rails. As a matter of fact, you can build the tray in much the same way you built the seat and backrest. The exception here is that the end rails are the same thickness as the slats. That means you can center the groove in the rails for the tenons on the ends of the slats.

RUNNERS AND KICKERS. The tray runners are L-shaped pieces screwed to kickers on the underside of the frame. The kickers keep the tray from tipping out. When fastening the runners, you'll want to space them to hold the tray but still allow it to slide.

FINISH. To give the chaise lounge protection while sitting outdoors, I sprayed on three coats of spar varnish, sanding between coats. And when the finish dries, you're ready to roll the lounge out to the backyard and relax. W

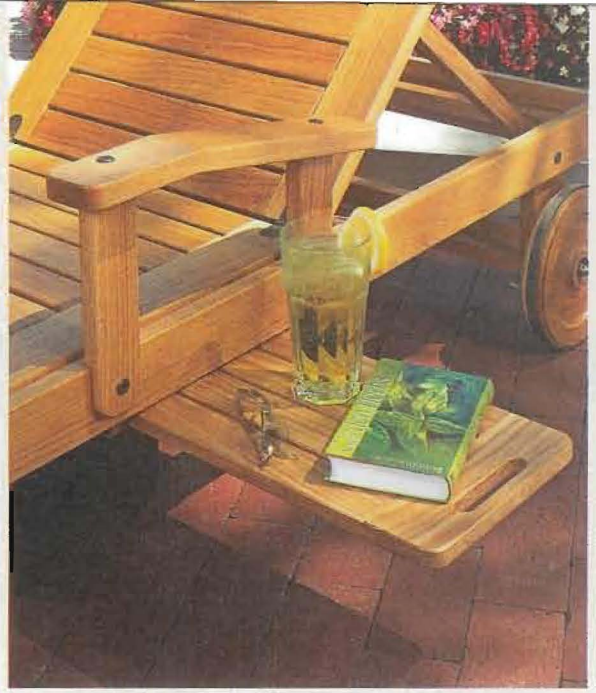

▲ The sliding tray is a convenient addition to the lounge. It can pull out from either side or be removed completely and used as a serving tray.

Materials, Supplies, & Cutting Diagram

A	Inner Frame Sides (2)	3/4 x 1 3/4 - 70 3/4
B	Inner Frame Ends (2)	3/4 x 1 3/4 - 24 1/4
C	Side Rails (2)	1 x 3 - 75 3/4
D	End Rails (2)	3/4 x 2 1/4 - 24 1/4
E	Cross Rails (3)	3/4 x 1 1/2 - 24 1/4
F	Front Legs (2)	1 x 3 1/4 - 11 1/4
G	Front Stretcher (1)	1 x 3 1/4 - 23 3/4
H	Rear Legs (2)	1 x 3 1/4 - 6
I	Rear Stretcher	1 x 3 1/4 - 26 1/2
J	Axle Cap (1)	1 x 1 1/2 - 26 1/2
K	Wheel Blanks (4)	3/4 x 10 1/2 - 10 1/2
L	Slats (27)	3/4 x 2 1/4 - 18 1/2
M	Back Frame Rails (2)	1 x 3 1/4 - 33 1/4
N	Seat Frame Rails (2)	1 x 3 1/4 - 44 3/4
O	Back/Seat End Rails (3)	1 x 2 1/4 - 18 1/2
P	Back Top Rail (1)	1 x 3 1/4 - 18 1/2
Q	Support Arms (2)	1 x 1 1/4 - 16 1/2
R	Support Stretcher	1 x 2 1/4 - 21 1/2
S	Pivot Rods (4)	3/4"-dia. x 1 1/4
T	Pivot Blocks (2)	1 x 1 3/4 - 5 1/2
U	Ratchet Blocks (4)	1 x 1 1/4 - 6 3/4
V	Arm Uprights (4)	1 x 2 1/4 - 7
W	Arm Tops (2)	1 x 3 - 18
X	Arm Blocks (2)	1 x 3 - 5 11/16
Y	Tray Slats (4)	3/4 x 2 1/4 - 20 3/4
Z	Tray Rails (2)	3/4 x 3 1/4 - 9 3/4
AA	Tray Runners (2)	1 x 1 1/4 - 24 1/4
BB	Tray Kickers (2)	3/4 x 1 - 20 3/4

- (12) 1/4"-20 x 1 1/8" Connector Bolts
- (12) 1/4"-20 Cap Nuts
- (6) 1/4"-20 x 2" Connector Bolts
- (6) 1/4"-20 Threaded Inserts
- (1 pair) Single-Pin Hinges w/Screws
- (32) #8 x 1 1/4" Exterior Fh Woodscrews
- (4) #8 x 1" Exterior Fh Woodscrews
- (1) 1/2"-dia. x 29 3/4" Threaded Rod
- (2) 1/2" I.D. Bronze Bushings
- (2) 1/2"-13 Stainless Steel Acorn Nuts
- (4) 1/2" Stainless Steel Washers
- (2) 1/2" x 30" O.D. V-Belt

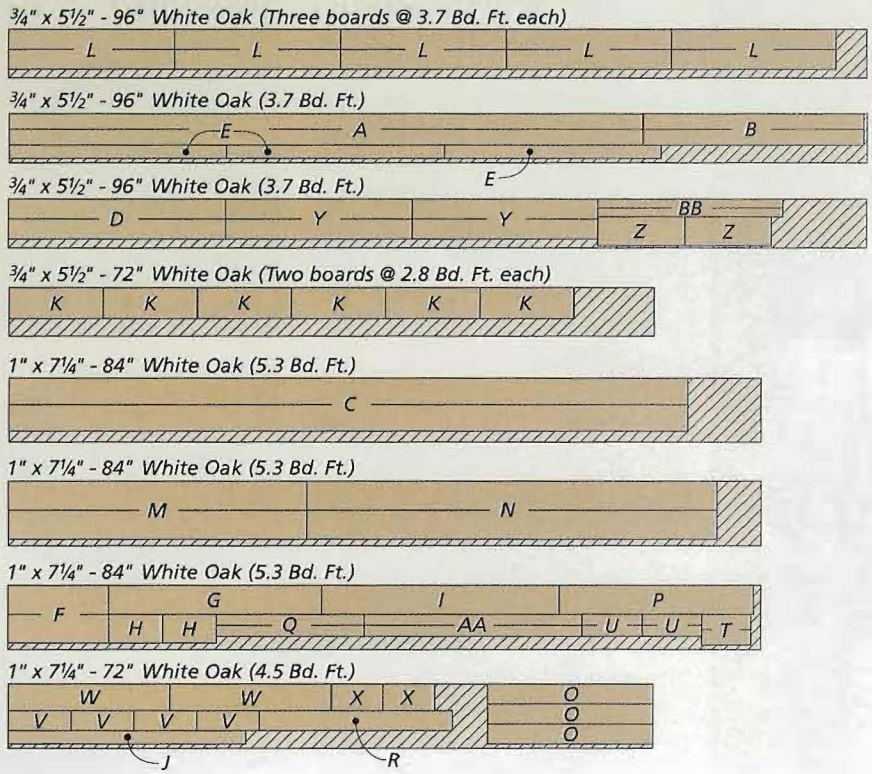

SHOP NOTEBOOK

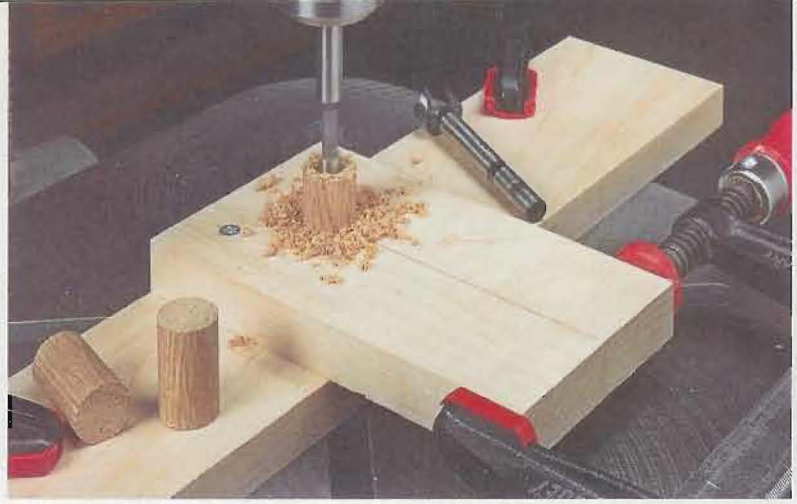

Dowel Drilling Jig

There's not much to making the pivot rods for the chaise lounge on page 22. Each one is just a ¾"-dia. dowel with a ⅜"-dia. hole drilled lengthwise through the center. The trick is figuring out how to hold the dowel in place while drilling a centered hole on the end. To do this, I used the jig you see in the drawing below.

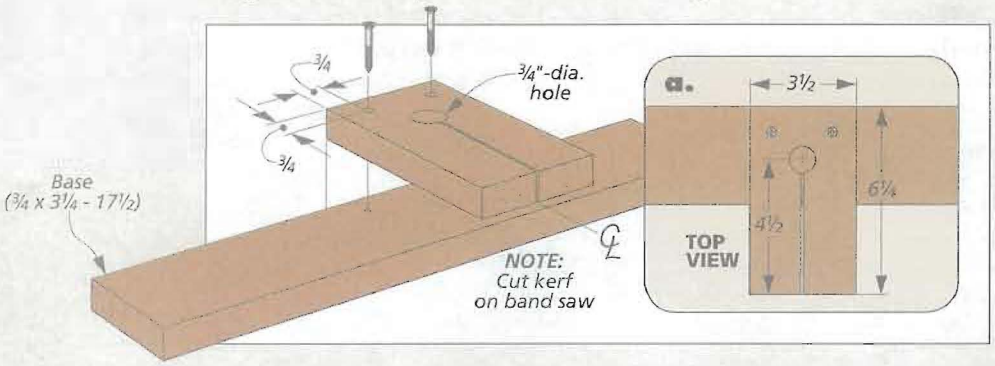

The jig is nothing more than a piece of hardwood with a hole drilled in it to match the diameter of the dowel. A saw kerf running from the opposite end of the block to the hole allows you to pinch the block around the dowel, holding it firmly in place. A base allows you to clamp the jig to your drill press.

To use the jig, position it on your drill press so the hole for the dowel is directly under the drill bit. (You can use a ¾"-dia. bit to position the jig.) Now, simply replace the bit with a ⅜"-dia. bit, clamp the pivot rod in the jig, and drill the hole.

Taper Jig

Cutting the tapers on the legs for the table on page 14 posed a bit of a challenge. Due to the thickness of the legs, I couldn't use a sled-type jig. I wouldn't have been able to raise my saw blade high enough to cut all the way through the blank. So instead, I came up with a taper jig that allows the leg blank to ride directly on the table of the saw, as you see in the photo at right.

The jig is just a piece of ¾" MDF with an angled notch cut along one edge. To lay out the notch, place the leg blank on top of the jig so that the top end is flush with the edge and the bottom end overhangs the edge (see drawing in margin at left). After laying out the notch, you can cut away the waste with a band saw or jig saw.

END BLOCKS. To hold the blank in place, I glued a block of wood at each end of the notch. As you can see in Figures 1 and 2, a screw mounted in each block is tightened down on the ends of the blank pinching it in place.

▼ The design of this jig allows you to cut a taper on a 3"-square blank.

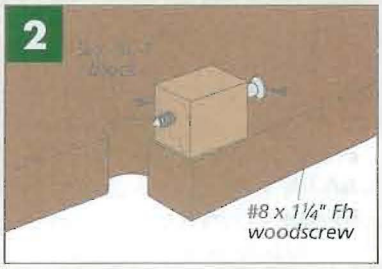

To use the jig, place the leg blank in the notch and tighten the screws. Then, adjust the rip fence of your saw so the jig fits between the fence and the saw blade. Now with the jig riding against the rip fence, cut the taper on the leg blank.

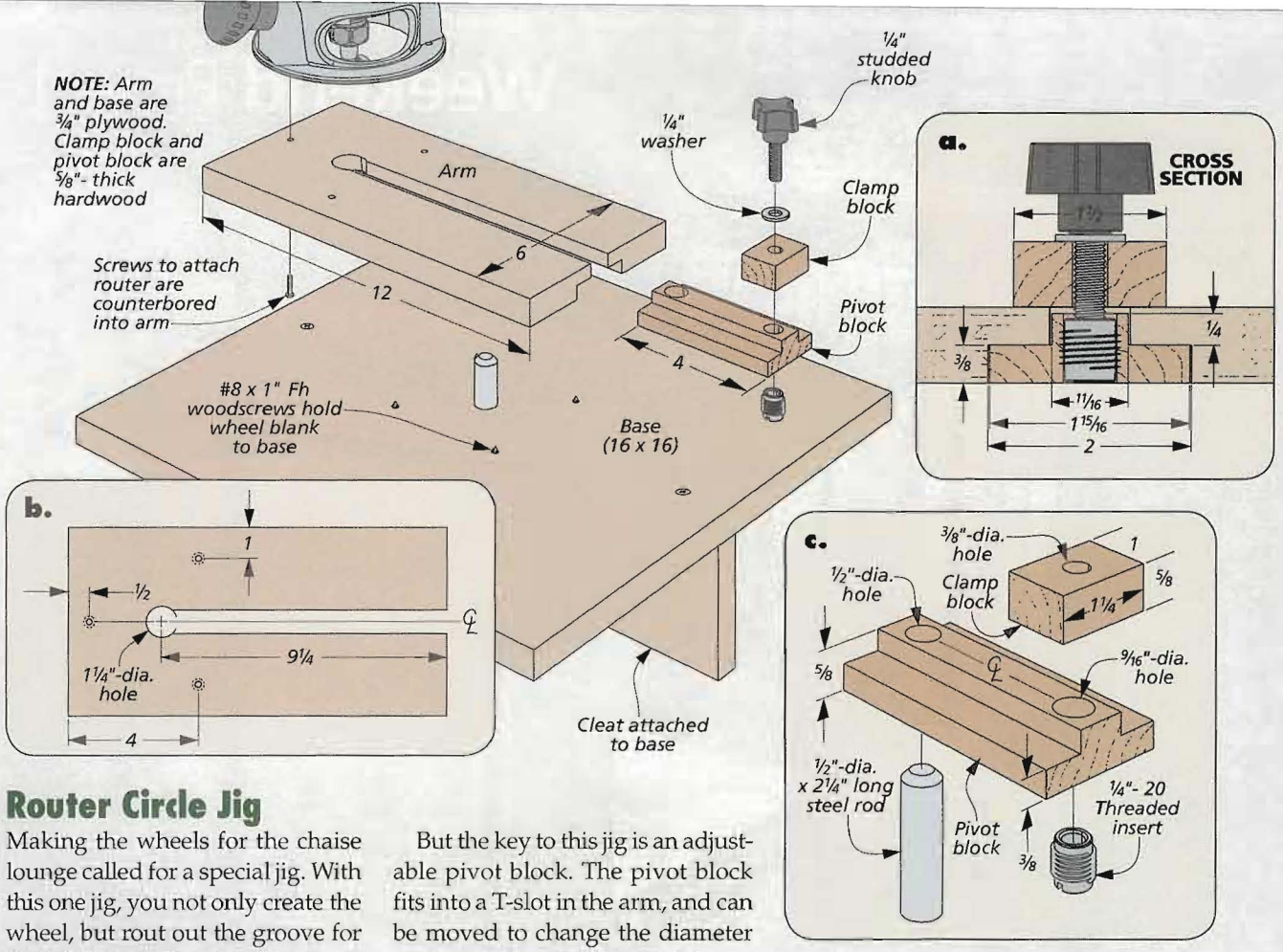

Router Circle Jig

Making the wheels for the chaise lounge called for a special jig. With this one jig, you not only create the wheel, but rout out the groove for the V-belt as well as the recesses on each face of the wheel.

As you can see in the drawing above, the jig is really nothing more than a trammel arm that is attached to the base of the router. The arm pivots on a steel pin, allowing you to rout a perfect circle.

But the key to this jig is an adjustable pivot block. The pivot block fits into a T-slot in the arm, and can be moved to change the diameter of the router's path (detail 'a').

The arm is cut from a piece of ¾" plywood. The T-slot is centered on the width of the arm (detail 'b').

The pivot block and clamp block are made out of hardwood (detail 'c'). A couple of holes are drilled in the pivot block — one for the pivot pin and another for an insert that holds a threaded knob (detail 'c').

To complete the jig, I added a plywood base. A hole is drilled in the center of the base for the pivot pin. And a vertical cleat allows you to clamp the base in a bench vise.

Lounge Assembly Jig

Assembling the seat and backrest panels for the chaise lounge involves gluing a number of slats into a frame. The challenge is keeping the spacing between the slats consistent during assembly.

To do this, I made the simple assembly jig shown below. The jig is just a piece of ¾" melamine with a series of evenly spaced grooves cut on one face. The grooves are sized to hold ¼"-thick spacers.

To use the jig, simply place the spacers in the grooves and then set the slats in between the spacers. The jig holds the slats in position, allowing you to focus on clamping up the rails and stiles. W

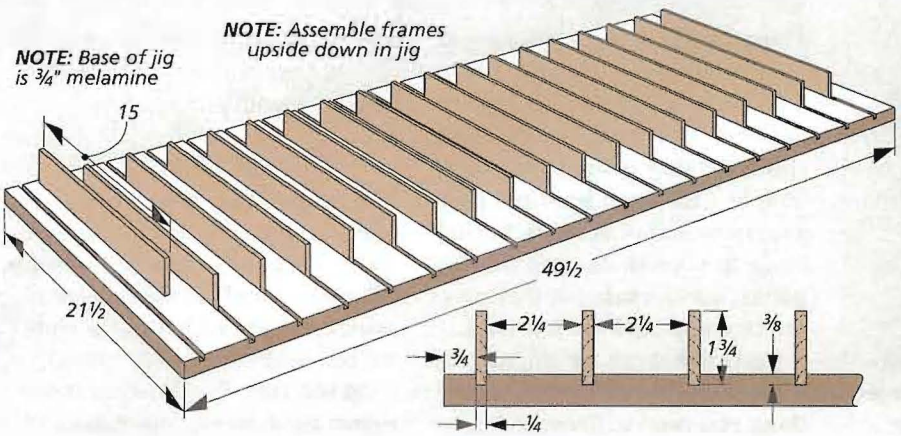

▼ This jig maintains an even spacing between the slats during glue-up.

chip-carved Book Rack

Here's a small project with big appeal — a great look, classic joinery, and a chance to learn a simple carving technique.

▲ The chip-carved panels really dress up this project. And picking up the basics is surprisingly easy.

There's no rule that says a small, straightforward project can't have loads of detail as well as interesting woodworking. The book rack shown above proves the point. Simple, Craftsman lines and basic joinery provide just the right challenge to your skills. And the best part is that start to finish, the project can be completed in a few days.

Don't fret about the chip-carved end panels. We'll show you everything you need to know to master this traditional technique on page 38. Or, you can simply build the book rack with plain panels.

FIRST, THE BASE

The construction breaks down as follows: First, you build a base that consists of a pair of rails and a shelf. Then, identical frame-and-panel assemblies are added to the ends to "box in" the books.

THE BASE RAILS. The drawing at the upper right shows the details of

the rail and shelf assembly. You'll start by making the two rails.

After cutting the rails to width and length, the next step is to cut dadoes across both sides near each end (detail 'b'). These shallow dadoes form half of the saddle joint that connects the rails and the end assemblies. The width of these dadoes matches the thickness of the end frames you'll add later.

CUTOUTS. Once the dadoes are complete, the next task is to make cutouts that form feet on the ends of the rails. The cutouts on the rails (and later the end frames) are one of the distinctive details of the book rack, so I wanted them to be smooth and crisply cut. The four-step process I used to do the job is shown in the box below. It may take a little extra time, but will give you great results.

BEVELED ENDS. With the cutouts finished, there's one more aesthetic detail to add to the rails. A 30° bevel is cut on the end of each rail at the table saw, as shown in detail 'c.' A stop block clamped to an auxiliary fence on the miter gauge will help you make consistent cuts.

SCREW HOLES. A final task and the rails are done. The shelf and end frames will be screwed to the rails. So both rails need a pair of countersunk holes drilled at each end (detail 'd'). One hole is centered on the dadoes for the end frames, and the other is used for the shelf.

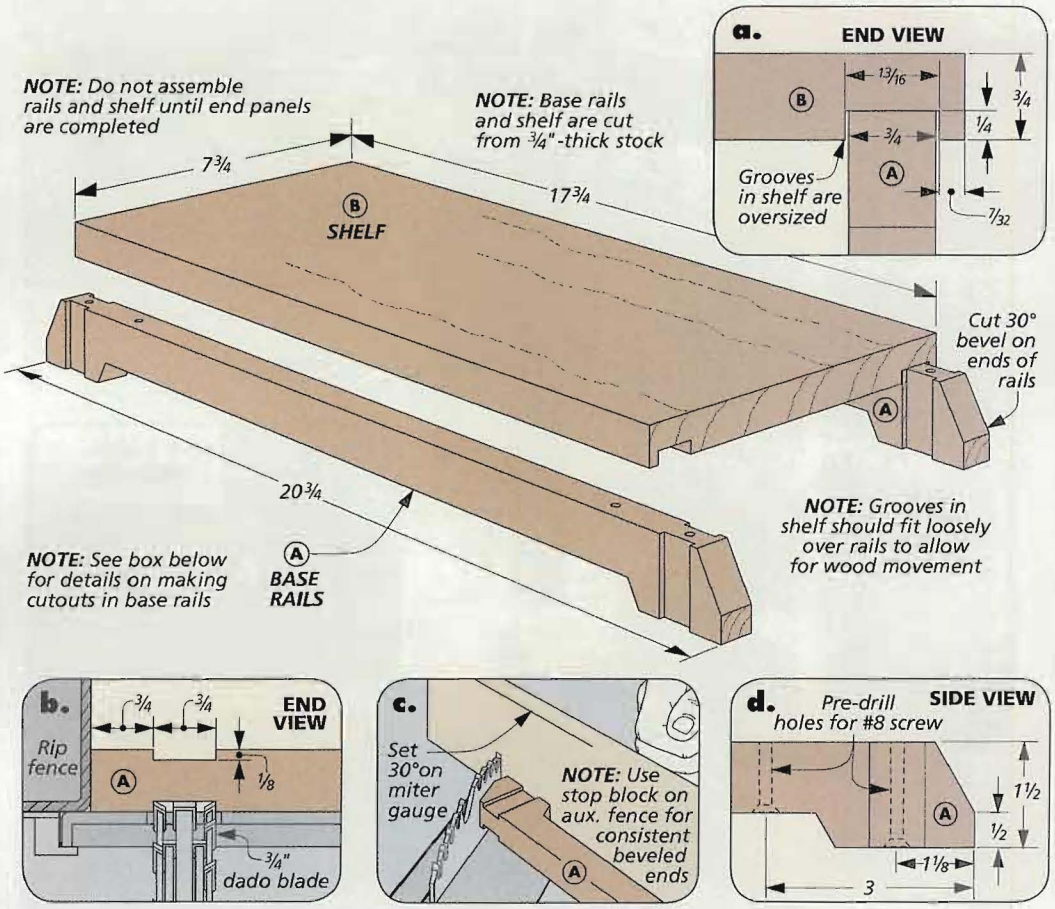

THE SHELF. The rails are now ready for the shelf. This simple addition will go pretty quickly.

First, I cut the shelf to finished size. I used a single, wide board, but a glueup will work just as well. You want the length of the shelf to exactly match the measurement between the inside shoulders of the dadoes in the rails.

The shelf doesn't simply rest on top of the rails — grooves cut into the bottom of the shelf fit over the rails. You want to cut these grooves just a little bit wide to allow for expansion and contraction of the shelf in the final assembly. Take a look at detail 'a' above and you'll see how this works.

After cutting the grooves, hold off fastening the shelf to the rails. It's better to wait and do this after you've assembled the base rails and the end assemblies.

How-To: Make the Rail Cutouts

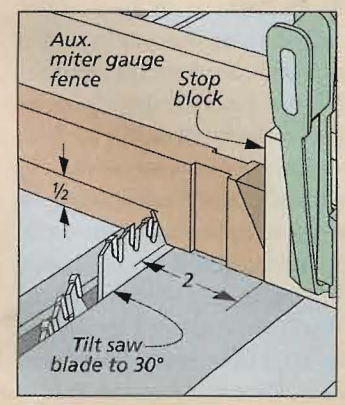

A Bevel Cut. *I started the base rail cutout by making a 30° bevel cut at each end.*

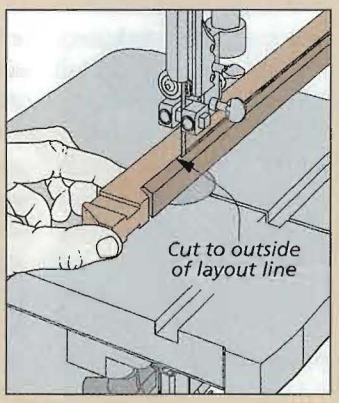

Rough Cut. *Next, take the two rails to the band saw to rough cut the waste.*

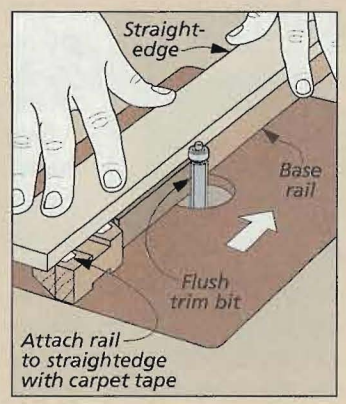

Flush Trim. *Now, smooth the band saw cut using a flush-trim bit in the router table.*

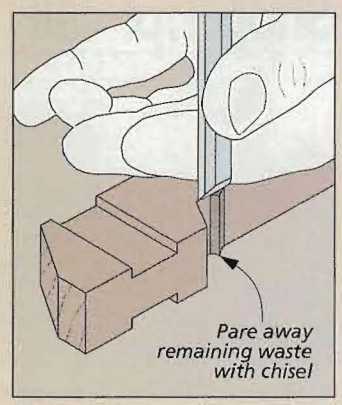

Clean Up the Waste. *Finally, clean up the waste at the ends with a sharp chisel.*

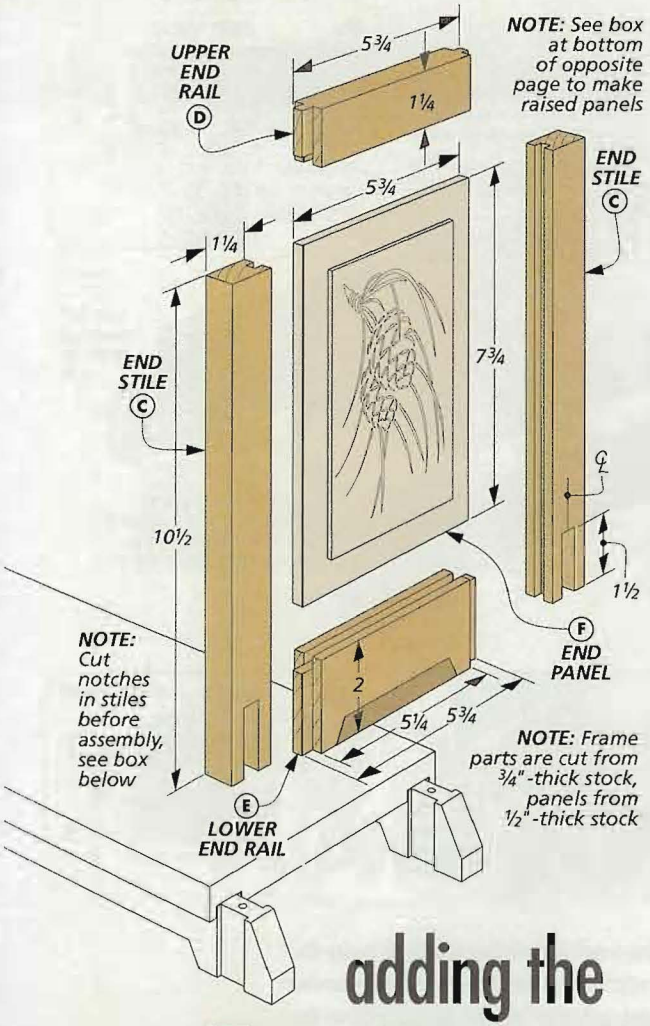

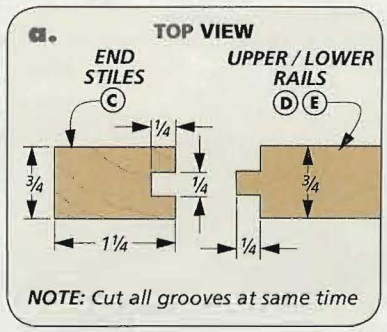

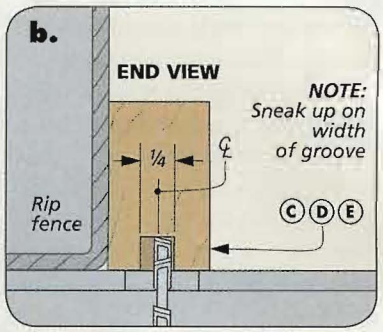

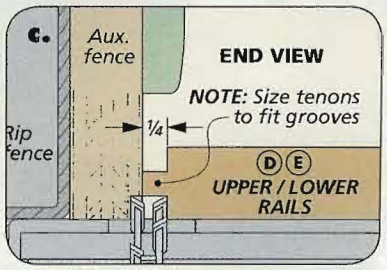

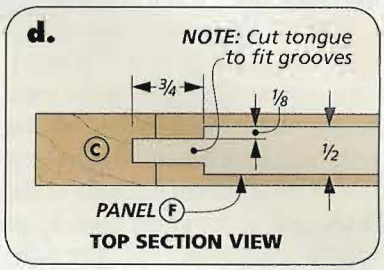

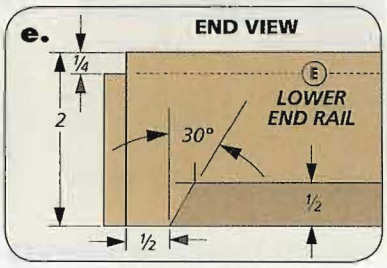

adding the END FRAMES

With the rails and shelf ready and waiting, you can now turn your attention to building the identical frame and panel assemblies that close in the ends of the book rack. For me, the neat part of this job is that the joinery here will keep you on your toes, but the small scale makes it very manageable.

FIRST, THE FRAMES. The drawing above shows you all the details you need to get started. Making the rail and stile frames that hold the panels is the first step.

STUB TENON AND GROOVE. After cutting the frame parts to size, you tackle the simple stub tenon and groove joinery, as shown in detail 'a.' Cutting the shallow grooves is the first task. A standard blade on the table saw will easily handle this job. To end up with a centered groove, I flipped the workpiece end-for-end between cuts. Detail 'b' above illustrates the process.

Next, I cut the mating stub tenons on the ends of the rails. Installing a dado blade on the table saw is the quickest and most accurate way to get this job done. You want to shoot for a good snug fit in the shallow groove. This will give you a solid frame asembly. Take a look at detail 'c' for guidance on this.

LOOSE ENDS. The basic frame joinery is now complete, but there are a couple more things to take care of before moving on to the panels. First, as you can see above, the lower rails have cutouts that mirror those on the side rails. You can follow the same procedure you used before to get this done.

Finally, while the frames were still in pieces, I cut tall notches in the ends of the stile that complete the "frame-to-rail" saddle joint. The box at lower left shows the table saw technique I used, and there are a couple of things to keep in mind when doing the work.

There are two goals here. First, you want the notch to fit snugly over the dado in the base rail. And since the top edge of the notch will simply butt against the top of the rail, you want it to be as clean and crisp as possible. A "sneak-up-and-test-fit" approach is a good solution to both these challenges.

NEXT, THE PANELS. With the notches cut, you can set the frame pieces aside and start on the panels. And if you haven't already done so, you now have a decision to make. You can keep things simple and make "plain" panels, or dress them up with a chip carved design. I think you'll find that the carving technique is easy to learn and we'll show you all the basics on page 38. Either way, the panels start out the same way.

Since my panels were going to be carved, I chose to make them out of soft basswood. Its light color

Shop Tip: Tall Notches

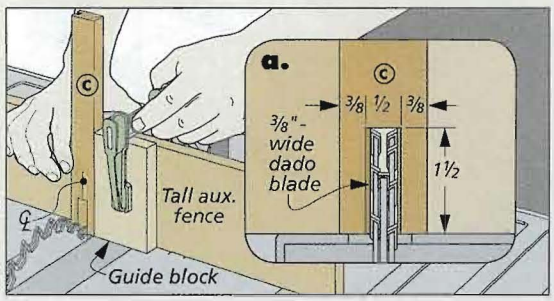

A tall, auxiliary miter gauge fence allows you to hold the stile upright, and a guide block keeps it square to the table. Flip the workpiece side for side between cuts to center the notch.

also helps highlight the simple carving. For plain, raised panels, cherry is a good option.

As you can see in detail 'd' on the opposite page, the panels are cut from ½"-thick stock and have a raised field on both sides. The field is created by cutting rabbets around the perimeter of the panel. To do this, I took the panels to the router table. With a straight bit installed, you can easily size the "tongue" for a snug fit in the grooves and also cut clean, smooth rabbets. The box below shows the setup.

ASSEMBLY. Once the panels are fit to the frames, the carving follows. It's easier to do this before assembly. When the panels are ready, you can glue the frames together. But don't glue the panels in place. You need to allow them to expand and contract. Finally, check out the clamping tip in the right margin.

THE CAPS. One more addition and the end frames are finished. As shown at right, each one is topped with a beveled cap.

Making this piece isn't difficult, but there are a couple of details to note. The inside edge of the cap is square and it sits flush with the inside edge of the frame. The ends and outside edge are beveled, but not at the same angle, as you can see in details 'a' and 'b.' This difference adds a nice visual effect.

The box below shows the technique used to cut the two different bevels on the table saw. And when the caps are ready, you can glue them to the tops of the frames.

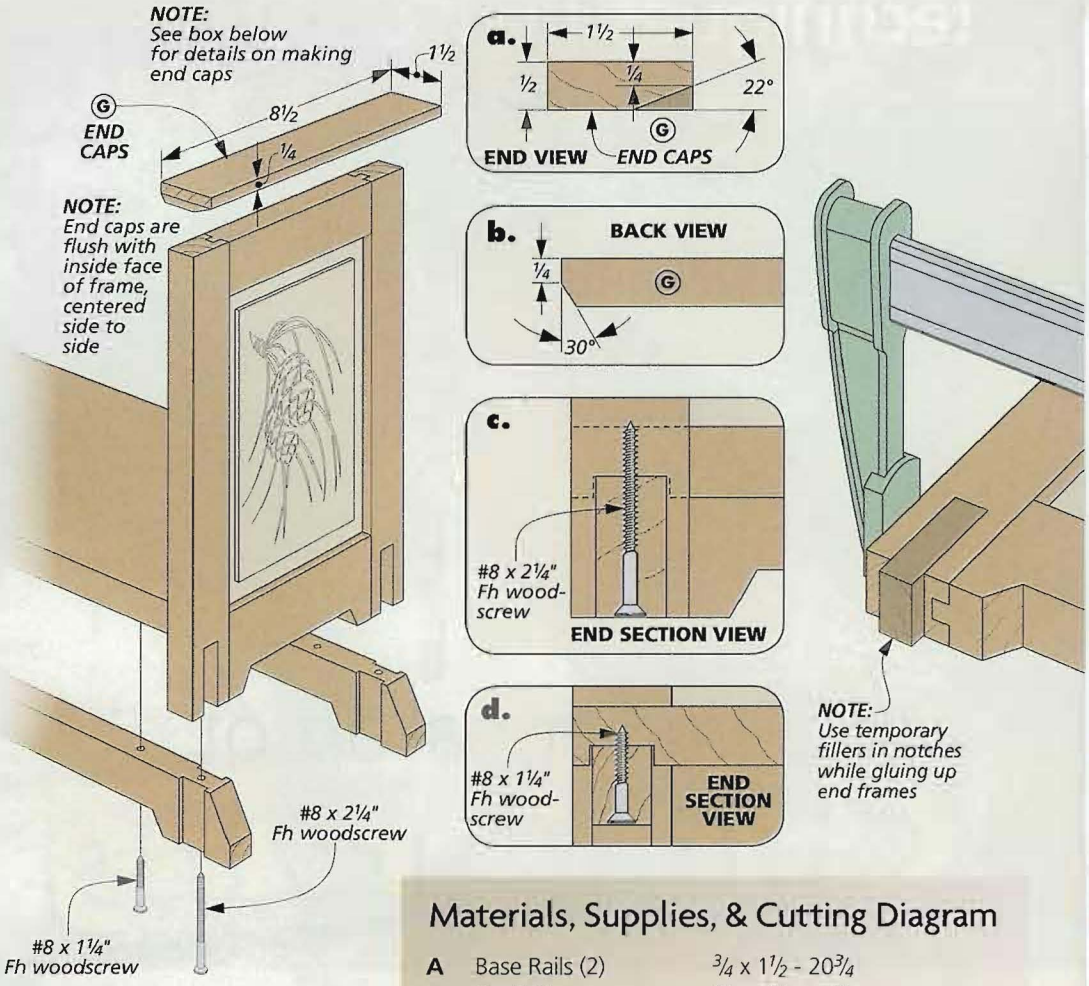

FINAL ASSEMBLY. Now you're ready for the final assembly. First, dry assemble the end frames and rails and extend the pilot holes into the frames. Then reassemble the parts with glue and install the screws. Lastly, set the shelf in place and simply screw it down (detail 'd').

Three coats of wiping varnish will give the cherry a warm color and durable finish. And all that's missing are a few favorite books. W

Materials, Supplies, & Cutting Diagram

A	Base Rails (2)	¾ x 1½ - 20¾
B	Shelf (1)	¾ x 7¾ - 17¾
C	End Stiles (4)	¾ x 1¼ - 10½
D	Upper End Rails (2)	¾ x 1¼ - 5¾
E	Lower End Rails (2)	¾ x 2 - 5¾
F	End Panels (2)	½ x 5¾ - 7¾
G	End Caps (2)	½ x 1½ - 8½

- (4) #8 x 1¼" Fh Woodscrews
- (4) #8 x 2¼" Fh Woodscrews

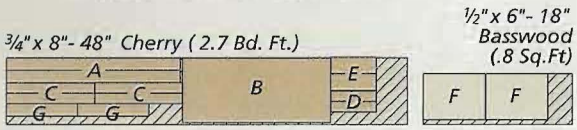

NOTE: Parts (G) resawn to ½" thick

How-To: Make the Raised Panels & Bevel the Caps

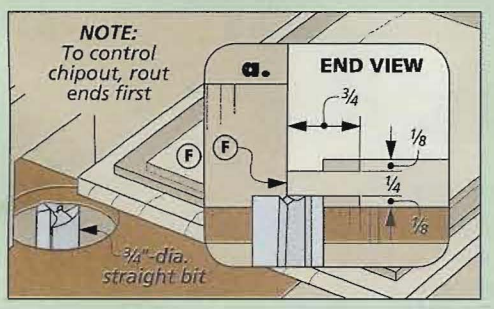

Panel Rabbets. *After adjusting the height of the bit to size the "tongue," rout the panel rabbets with multiple passes.*

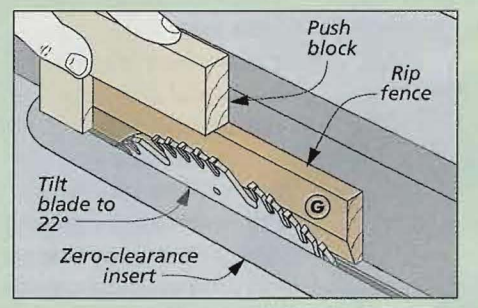

A Long Bevel. *The long bevel on the cap is cut with the blank on edge. Be sure to use a push block to feed the piece.*

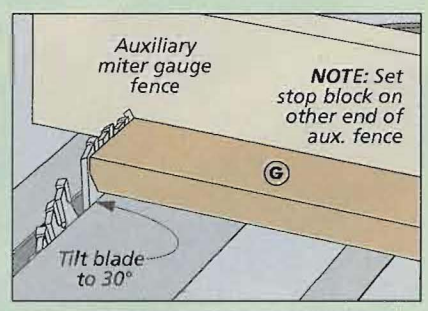

The End Bevels. *The 30° bevels on the ends of the caps can be cut easily using an auxiliary fence on the miter gauge.*

the traditional art of Chip Carving

The tools are simple and the techniques are easy to learn. But it's the final result that's truly impressive.

The thought of putting a carving tool to wood and trying to produce something that looks good can be a little intimidating. Skill and years of practice come to mind.

Fortunately, for those of us who still want to give it a shot, there's the art of chip carving. This is the technique used on the book rack project on page 34. Chip carving can be learned quickly, the tools are basic, and you can achieve great results in pretty short order.

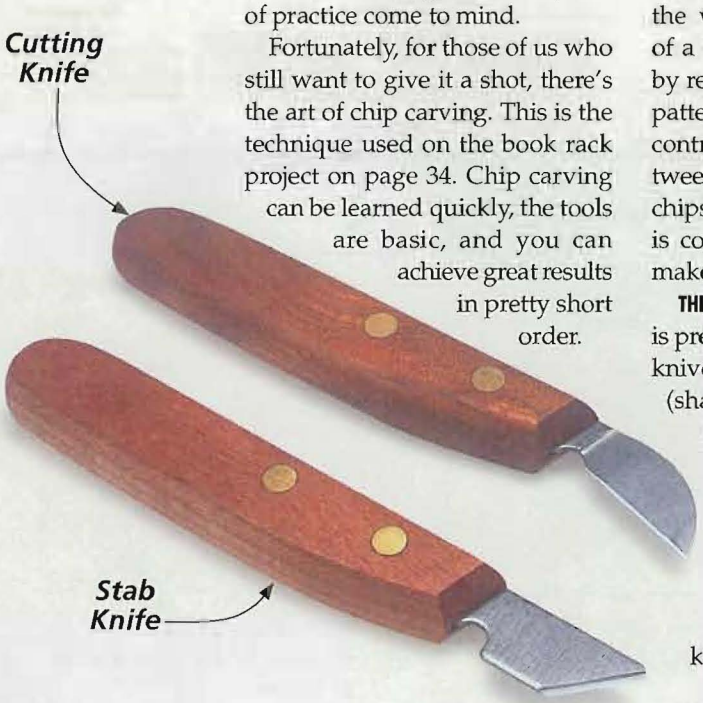

WHAT IS CHIP CARVING? Chip carving is just what the name implies. Individual, V-shaped "chips" are removed from the flat surface of the workpiece with angled cuts of a knife. Your design is created by removing a series of chips in a pattern. And the goal is to create a contrast of light and shadow between the surface and the incised chips. The fact that a chip carving is completed one chip at a time makes the process easy to handle.

THE TOOLS. A chip carving toolbox is pretty basic. One or two carving knives and a few other accessories (sharpening stones, layout tools) are all you need.

The primary tool is a short-bladed cutting knife — the upper knife shown in the left photo. It's responsible for making all the chip cuts. The stab knife, bottom knife at left, is used to create or enhance designs by making simple impressions in the wood.

As you can see, the short blade of the cutting knife "hooks" inward slightly in relation to the handle. This allows you to present the blade to the wood at a comfortable cutting angle. The thin blade is honed on both sides at a very shallow 10° angle (photo below). This narrow bevel slices through the wood with very little effort.

A 10° Angle. *A sharp cutting knife is a must for smooth cuts. Each side of the edge is honed at a 10° angle.*

THE GRIP. The way you hold the cutting knife in your hand and present it to the wood is important. The top two photos at right give you the idea. For almost all cuts, the fingers wrap around the handle with the thumb resting along the inside, opposing the blade.

The goal of your grip is steady control of the knife when making the cuts. As you can see, this grip allows your thumb and knuckles to rest on the workpiece to help guide and steady the knife. Your hand should always be in contact with the workpiece as the cut is made.

As you can see in the bottom photo, the grip and technique for using the stabbing knife is a little less sophisticated. The fingers wrap around the handle with your thumb over the end. You simply press the end of the blade into the wood to leave an impression.

GET COMFORTATBLE. Chip carving is best done while seated. The workpiece can be lying on a bench, table, or even your lap. You'll be constantly turning the workpiece, sometimes even during a cut, so you don't want to clamp it down.

MAKING THE CUT. The goal of good chip carving is to "lift" the chip with as few cuts as possible — usually two or three. The resulting cut will look crisp and clean, coming to a sharp point at the bottom. Of course this ideal cut only comes with a little practice.

The perfect angle for a cut is at 65° to the surface. The resulting V-groove left by two cuts at this angle produces a "shadow" that best highlights the pattern. Again, this is the ideal and certainly isn't critical. If you just think of this as halfway between 45° and 90°, you'll be close enough.

LEARN A TRIANGLE CHIP. One of the most common motifs used in chip carving designs is the triangle chip. It's used for borders and geometric designs and is a "basic" technique in chip carving. Learning a triangle chip will give you good practice at handling the knife before trying your hand at a few of the other techniques.

The box below shows the three cuts needed to lift a triangle chip. I'll just add a few tips.

The layout is a row of squares about 3/16" on each side. You'll use two squares to make an elongated triangle. Keeping the squares small makes the cuts easier.

All the cuts start by placing the tip of the knife at a corner of the triangle. Then you use a downward push and a slight forward pull to cut to the opposite corner. At the end of the cut the edge of the knife will be on the line and angled back toward the starting corner.

Notice that to make the second cut in the opposite direction, you'll use a "reverse" grip (used only for this cut). Here the cut is made with a pushing motion.

After just a little practice, you'll lift triangle chips with three quick cuts. And once you've mastered this cut, you can turn the page and start work on a complete design.

Resting in the Fingers. *The proper grip for the cutting knife starts with the handle resting across all four fingers.*

A Firm Foundation. *With the knife gripped in the fingers, the knuckles and thumb can rest on the workpiece to steady the cut.*

Take A Stab. *The blunt stab knife is simply "stabbed" into wood to make a short or long (by tipping the knife) impression.*

How-To: A Triangle Cut

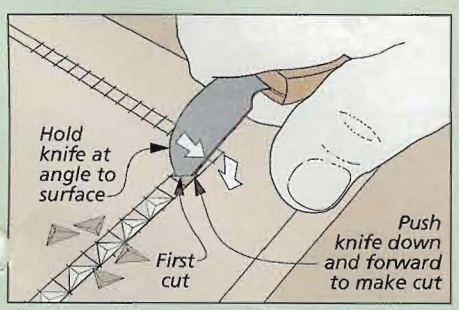

First Cut. *The first cut starts at the apex of the triangle. Push the knife down and forward until the edge reaches the baseline.*

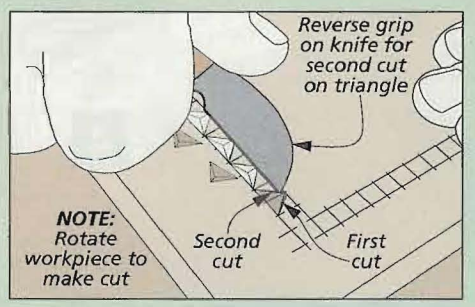

Second Cut. *To cut the second side, you'll need to turn the workpiece and reverse your grip on the knife.*

Final Cut. *Make the final cut along the baseline using the standard grip. At the end of the cut, the chip will lift free.*

carving a PINE CONE DESIGN

With a basic understanding and a little practice under your belt, the next step is to carve a complete design. Carving the pine cone design used on the book rack is really pretty straightforward. You can complete almost the entire design using two slightly different chip cuts. And both are fairly easy to make. You also have the option of choosing from the three alternate designs on the opposite page that rely on similar techniques.

FIRST, A PATTERN. Good chip carving starts with a sharp layout or pattern. This goes a long way toward helping you make crisp cuts. My answer to this is shown in the photo above. I copied a full-size, printed pattern (you can copy the pattern at right) and stuck it to the panel with spray adhesive. The sharp lines on a paper pattern are easy to follow, plus you'll be assured that the design is identical on both end panels.

SOME SIMPLE ADVICE. Before getting into the details of the carving, I want to give you a simple tip. As you know by now, a chip carving design is made up of lots of separate chips. You want to try to cut each chip as smoothly and cleanly as possible. At the same time, don't forget that each chip is just a small part of the design. So don't fret too much over each cut — the overall look is what's important.

THE BASIC CUTS. As mentioned, two basic "chip" shapes make up most of the design. Oval and crescent-shaped chips create the pine cone; long, gently curving chips represent the pine needles. But before starting on a finished panel, I suggest you copy an extra pattern, glue it to a blank, and practice the cuts. It will really help you get a feel for making the cuts smoothly.

CRESCENTS & OVALS. Figures 1 and 2 below show the sequence used to make a crescent or oval chip. The challenge is the small radius of the curves. The trick to making a tight turn is to stand the knife more upright. Only the tip of the blade will be in the cut, and you'll be able to follow the curve easier.

The cut starts and ends at the surface and reaches its deepest point through the middle. The goal is to cut deep enough to lift the chip, without undercutting.

PINE NEEDLES. The pine needles are created by removing a chip with

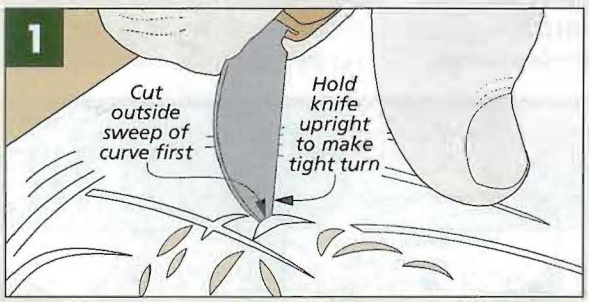

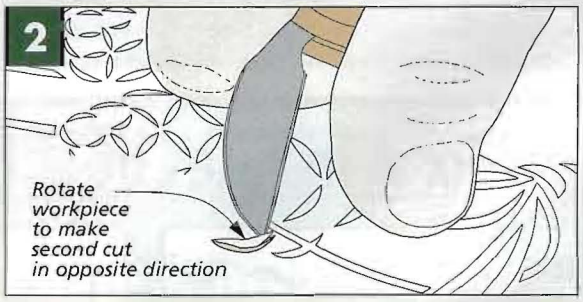

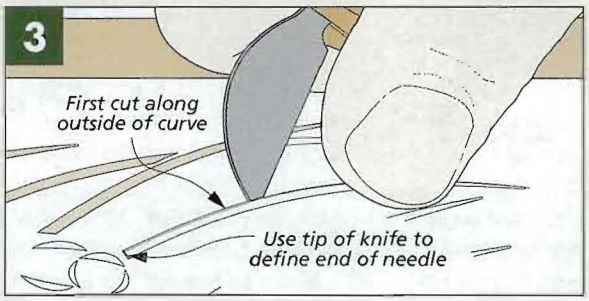

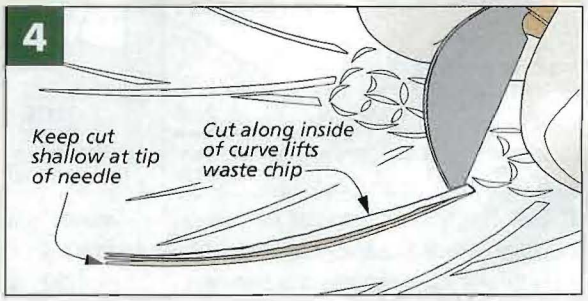

Pine Cone

Full-Size Pattern

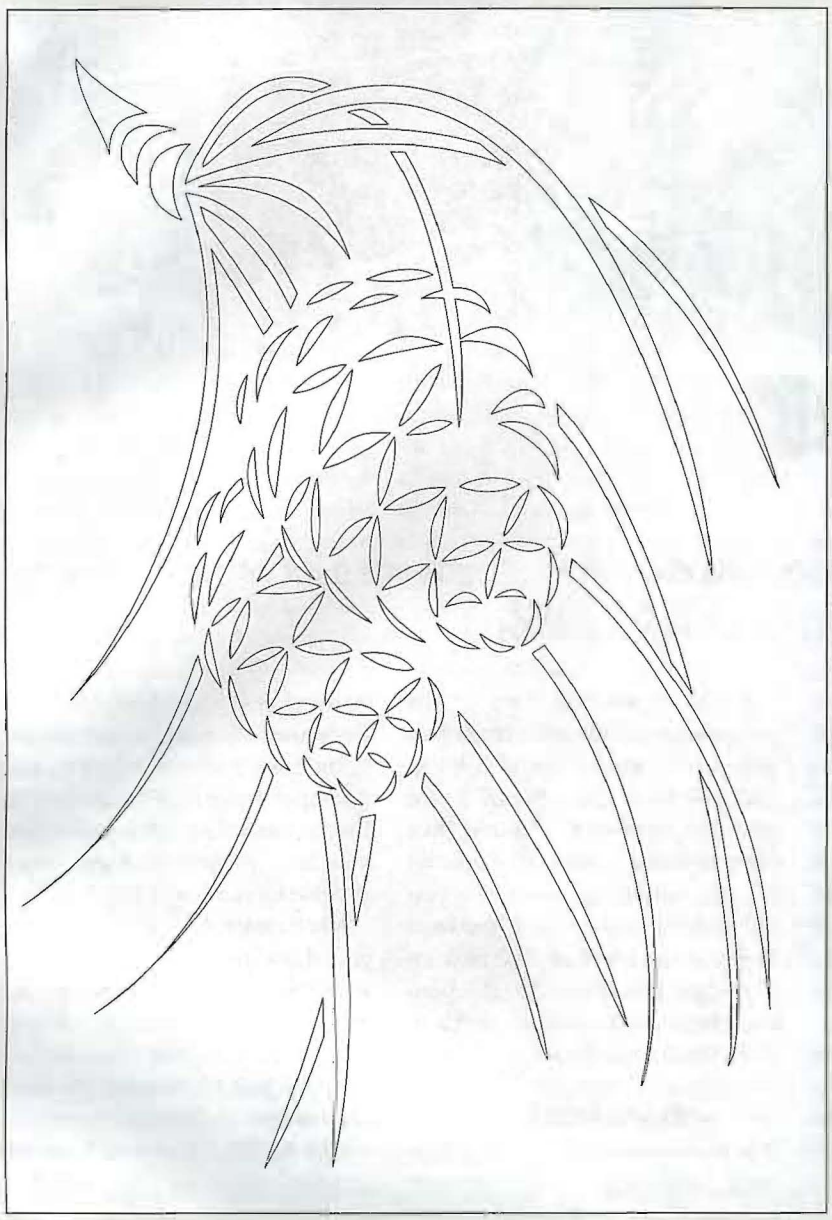

long sweeping cuts. A look at Figures 3 and 4 give you the idea. The chip starts with a small incising cut across one or both ends, using the tip of the knife. Then I cut the outside of the curve, followed by the inside cut, going in the opposite direction. (The depth of cut at the tip of the needle should be very shallow.)

When cutting the needle chips, you're simply shooting for a smooth curve. So if you wander off the layout line, don't worry — just gradually steer back. You'll also find it easier to follow the line if you turn the workpiece as you make the cut.

LET THE CHIPS FALL. When you're ready to tackle a finished panel, the order of the cuts really isn't too important. I started at the "stem" (a modified triangle cut) and worked down.

I'll offer one final piece of learned advice. You want the design to stand out strongly from the background. One way to do this is by making sure your cuts are right on the layout line — not to the inside. This way the chips will be full-size and show up better. And when you moisten the pattern and peel it off the panel, I bet you'll be pleasantly surprised at the quality of your handiwork.

Designer's Notebook

All four of the chip carving designs on this page can be downloaded as full-size patterns. Any of the optional designs below can be made using the cuts and techniques discussed in the article.

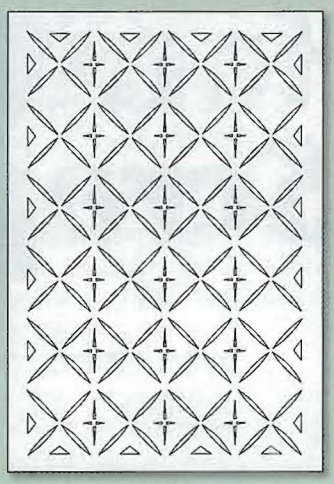

Geometric

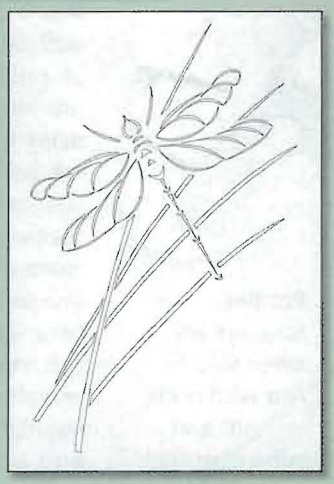

Dragonfly

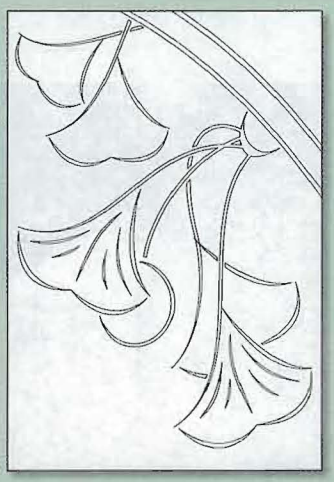

Ginkgo

Woodsmith GO ONLINE EXTRAS

For full size patterns of these chip carving designs, visit our website at www.Woodsmith.com

smoothing with a Hand Scraper

Even for avid power tool woodworkers, there are a lot of good reasons to put hand scrapers to work in your shop.

▲ **Profiles.** Scrapers are often sold in sets with both straight and curved profiles.

When it comes to smoothing the surface of a workpiece, most of us probably reach for a random-orbit sander. But for generations, many woodworkers have relied on another tool for this job — a hand scraper. Although it's nothing more than a simple piece of steel with a cutting burr on the edge, it's hard to imagine a tool that gives you more bang for the buck.

A scraper excels at removing saw and planer marks. And for smoothing highly figured boards, like the bird's-eye maple shown in the photo above, a scraper is the best way to avoid tearout.

A LOW-COST SOLUTION. One of the great things about scrapers is that you don't have to spend a lot to give one a try. You can buy a nice set with different profiles (like the one in the margin) for around $15. For about the same price, you can pick up a burnisher, the hard steel rod used to form the burr on the edge. (For more on sharpening, check out the *Online Extras* at Woodsmith.com.)

SCRAPER TECHNIQUE

A scraper is more forgiving than most hand tools. It doesn't require a fussy setup, so there's not a big learning curve involved. Once it's sharpened, there are a few simple techniques that will help you use a scraper successfully, but they're easy to learn. And when you scrape a surface, it's ready to finish — not clouded by sanding dust.

BOW THE BLADE. A scraper cuts when you draw the sharp burr over a workpiece. For the burr to engage the wood, you'll need to bow the scraper very slightly. You can do this with just a little pressure from your fingers or thumbs.

PUSH OR PULL. How you bow the scraper depends on whether you're pushing or pulling it across

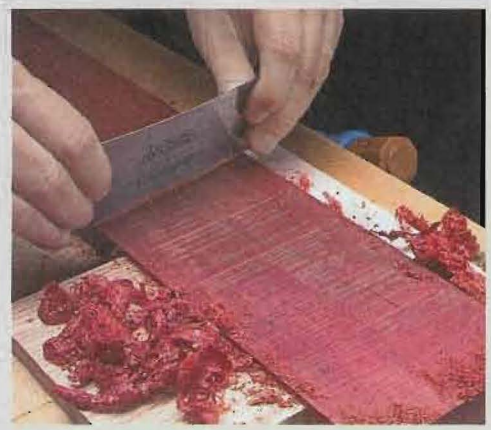

Milling Marks. *Band saw marks from the sawmill are common. A hand scraper makes short work of smoothing them out.*

Saw Marks. *The curved-profile scraper is the best choice for removing saw marks from cove molding made on the table saw.*

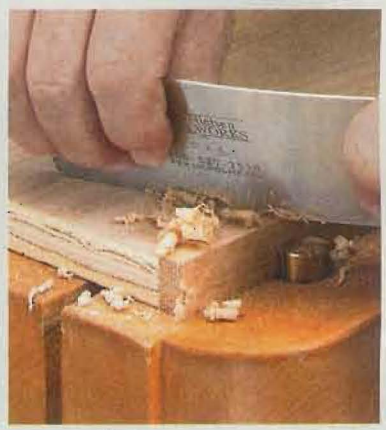

Plywood Edging. *A scraper excels at leveling edging on plywood without damaging the veneer.*

the workpiece. The illustrations at right show the different hand positions. You can bow the scraper with your fingers when pulling, or your thumbs when pushing.

Either option works well, it's just a matter of preference. Personally, I like to push the scraper to get a deeper cut when I need to remove a lot of material. But I find I have better fine control when pulling.

IT'S ALL IN THE ANGLES. Whether pushing or pulling the scraper, however, you'll need to be mindful of two angles. First, you'll need to find the best cutting angle for the burr. Detail 'a' shows a typical cutting angle of about 60°. You'll develop a "feel" for finding the cutting angle as you use the scraper.

Second, it's usually helpful to skew the angle of the blade in relation to the grain. This also helps you keep the surface level as you remove high spots.

LOOK FOR SHAVINGS. Once you get the hang of sharpening and using a scraper, the cuts will result in thin, curled shavings, not dust. The main photo on the opposite page shows you what I mean.

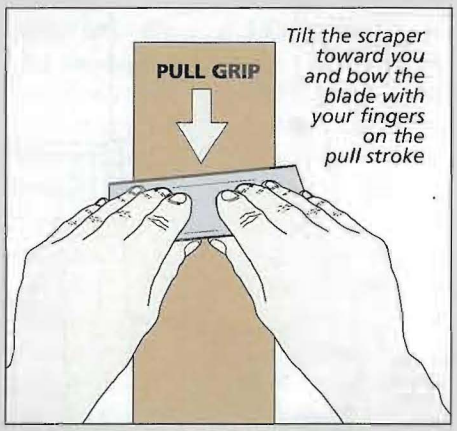

Tilt the scraper toward you and bow the blade with your fingers on the pull stroke

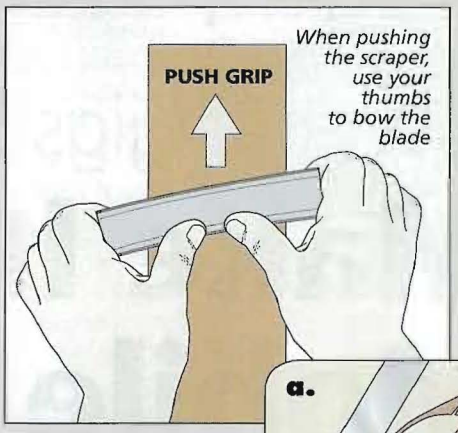

When pushing the scraper, use your thumbs to bow the blade

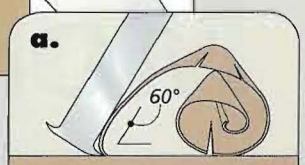

With a sharp burr and the right technique, a scraper produces shavings, not dust

WHEN TO USE A SCRAPER

There are lots of applications for scrapers. Jointers and planers are great for flattening and thicknessing boards, but they can also cause tearout and leave small ridges in the surface. As you can see in the left photo on the opposite page, milling marks left on the lumber from the sawmill are also a problem. All it takes is a few passes with a scraper to smooth the surface.

But one of my favorite uses for a scraper comes when I'm adding hardwood edging to plywood (right photo, opposite page). I can cut the edging a little wide and then scrape it flush with the surface of the plywood.

The big advantage a scraper has over a sander in this application is it minimizes the chances of damaging the thin veneer. You'll quickly see how much easier it is to control a hand scraper in this situation.

Once you've spent a little time and effort learning to sharpen and use a hand scraper, you'll be making thin shavings in no time. And when you see the results, you'll be putting the scraper to work on all of your projects. W

Woodsmith GO ONLINE EXTRAS

To learn how to sharpen a scraper, and see a video demonstration, visit our website at Woodsmith.com.

Worth a Look: Scrapers & Accessories

Sharpening and using a scraper can be a bit baffling at first. But there are several products available to help you out. Sharpening jigs and scraper holders can be useful, especially when you're just getting started. They can help you learn the right techniques and save your hands some pain and fatigue.

Custom-profiled scrapers can also come in handy, particularly if you're working on very small, detailed pieces of intricate molding. They can be a challenge to sharpen, but they leave a smooth finish. The products shown below are just a start. You can find out where to get them in Sources on page 51.

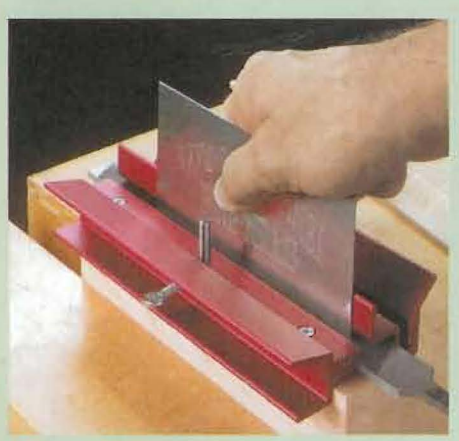

A sharpening jig with a mill file and built-in burnisher eliminates the guesswork from forming a burr.

If you've got a lot of scraping to do, a scraper holder can make the work a little more comfortable.

These *Auriou* brand profile scrapers are designed for finishing delicate carvings and intricate moldings.

shop-built jigs

Make It Mobile

Maximize your shop space by rolling idle tools and material out of the way.

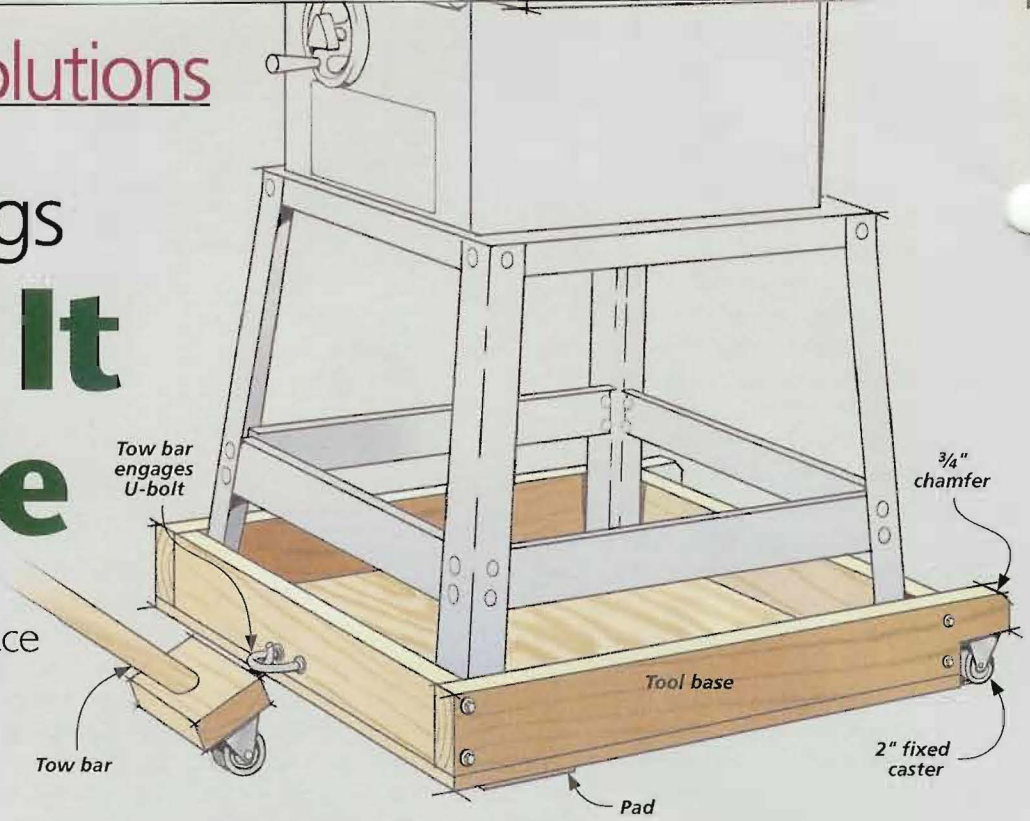

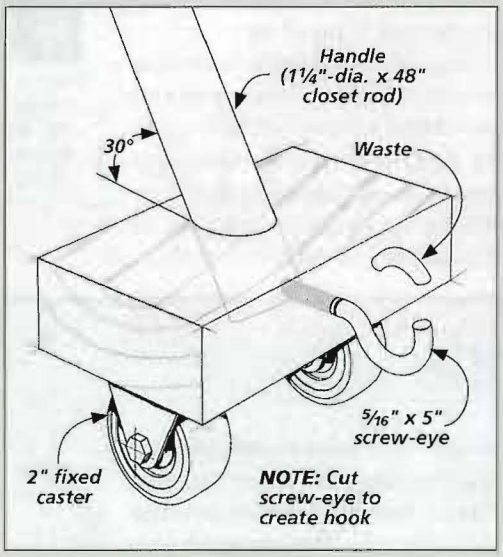

1 Roll-Around Tool Base

Mobile bases are invaluable when moving stationary power tools around in a small shop. And an easy way to move a tool base around is with a tow bar.

As you can see in the main drawing above, the tool base is simply an open box for the tool to sit in. On one side is a pair of casters. The other side has pads to stabilize the base when it's stationary.

When you're ready to move the tool, you just hook the tow bar into a U-bolt that's attached to the base (drawing below). Then, a little leverage is all that's required to lift that end and maneuver the tool around the shop.

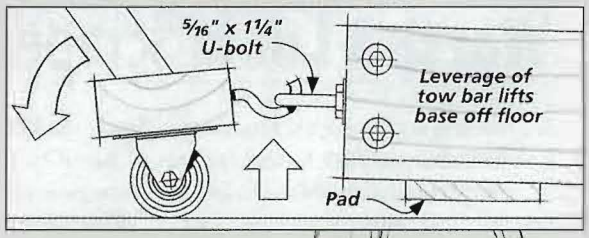

2 Mobile Stand

I've built several stands for my benchtop tools, keeping my workbench clear. To make the stands mobile, all it takes are two simple add-on handles and a pair of casters (drawings at right).

The first step in modifying a tool stand is to shorten the rear legs and attach casters. Then, bolt a pair of pivoting wood handles to the sides.

The handles can be lowered when not in use. When you need to move the stand, the handles can be locked in the upright position.

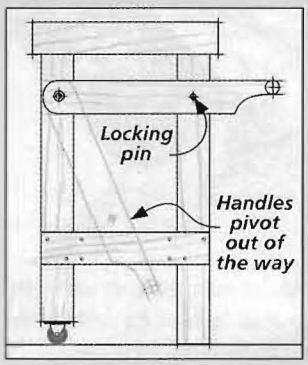

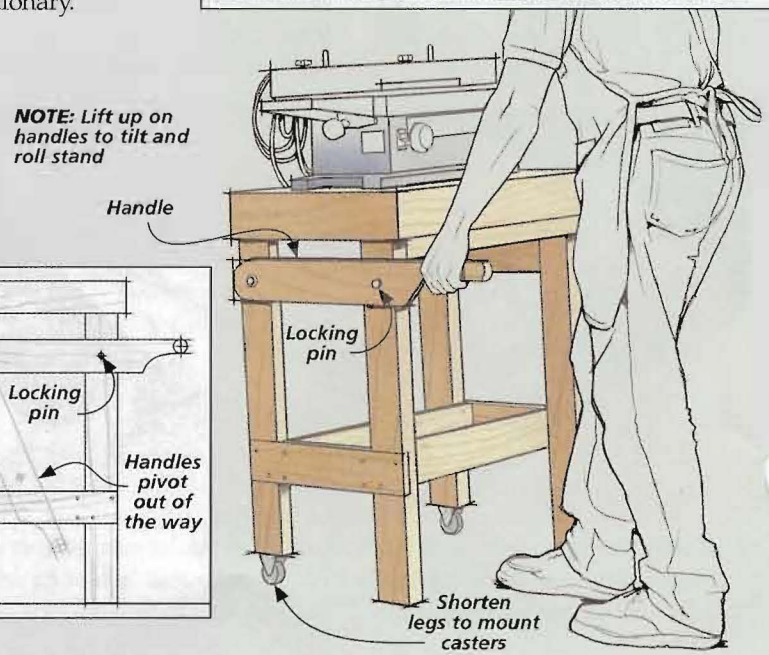

3 Caster Bracket

Adding pivoting caster brackets to my workbench makes it easy to move the bench around.

As the drawings show, the brackets are attached to the ends of my bench with butt hinges. Installed on each bracket are a pair of casters and a pivoting lever. Holddowns are also mounted to the stretchers of my workbench.

Stepping down on the levers lowers the casters which, in turn, raises the bench off its legs. To lock the casters in the lower position, slide the levers under the hold-downs. The bench is ready to roll.

Once the bench is where you want it, simply release the lever from the hold-down, and the legs drop back down onto the floor.

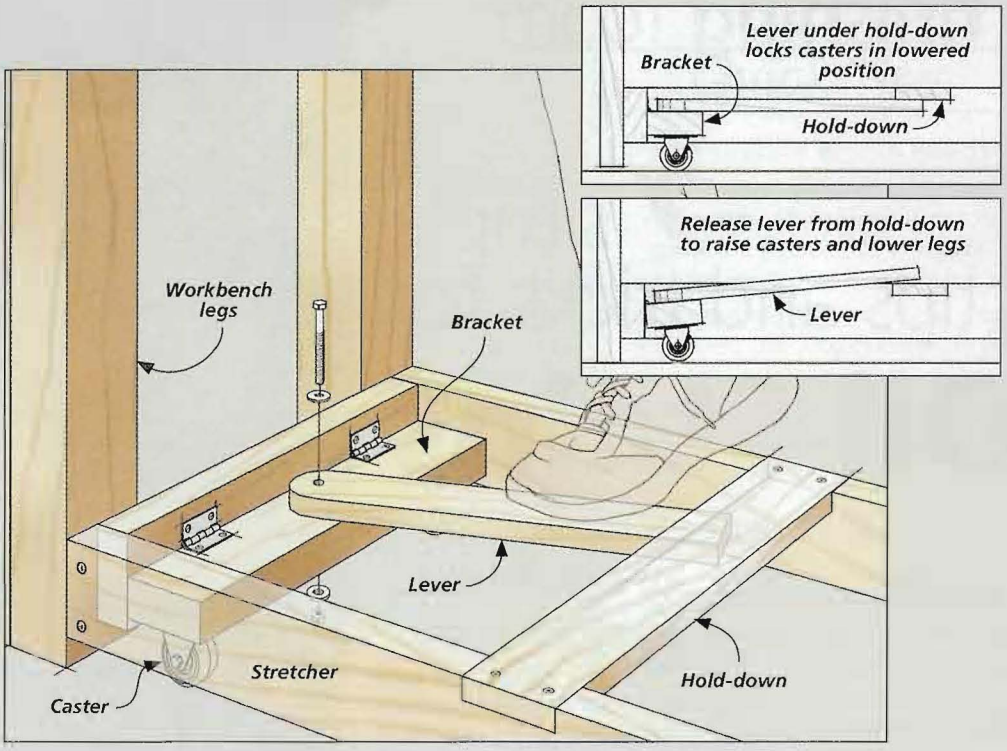

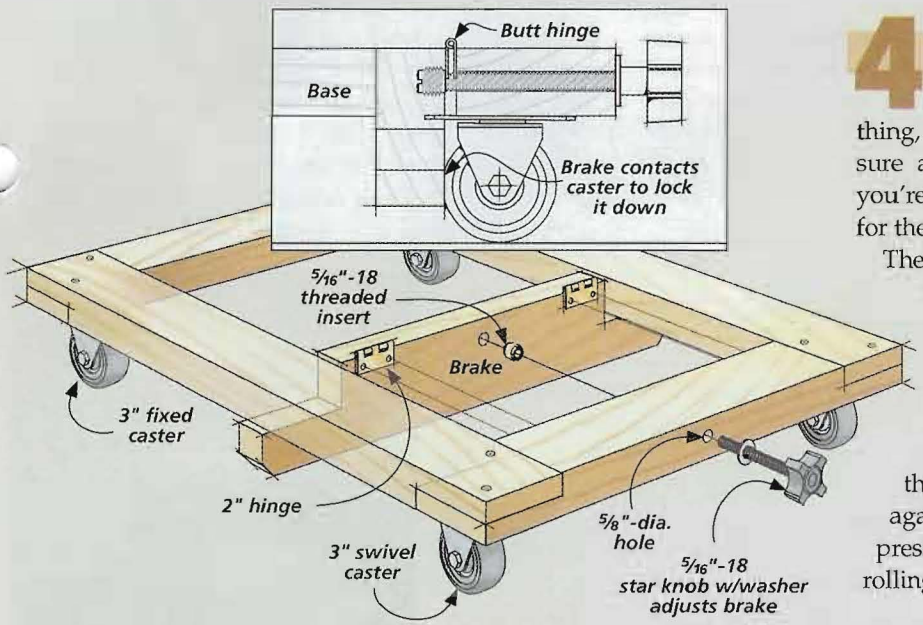

4 Mobile Base Brake

While mobility is a good thing, it's just as important to make sure a tool doesn't move while you're using it. So, I made a brake for the base (drawing at right).

The brake is just a block of wood mounted to one end of the base with butt hinges. A T-nut, threaded rod, and star knob complete the brake assembly.

With just a few twists of the knob, the brake is pulled against the casters with enough pressure to prevent them from rolling and swiveling.

5 Sheet Stock Skate

It isn't easy to maneuver sheet stock in a small shop. So, I made a simple, two-wheeled skate (drawing at right).

It consists of a pair of 2x4 sides that sandwich a spacer to form a 1"-wide groove to hold the sheet. Then, I added a pair of large wheels, which are connected by an axle made from a steel rod. End caps hold the wheels on, while fender washers prevent the wheels from binding against the sides. W

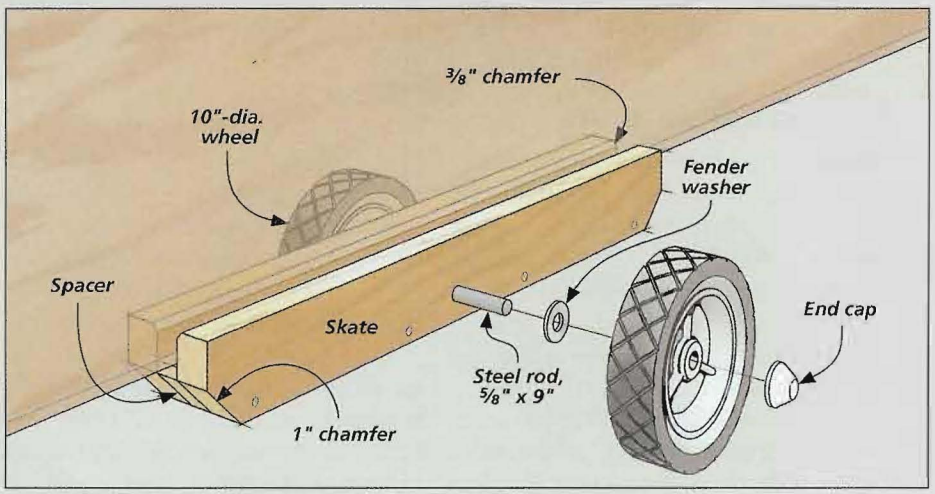

7 simple tips and tricks for Oil Stains

Want a perfectly stained project every time? Here are a few easy ways to ensure success.

Ask a woodworker what type of stain he or she likes to use and most often you'll get the generic reply "oil stain." Oil or pigment stains have been the standard way to color wood for years —and for good reason. For the most part, they're very easy to use and produce reliable results. You simply wipe or brush the stain on the wood, let it "soak in" for a few minutes and then wipe off the excess. It's a simple way to obtain a very dramatic change in color, as you can see in the photo above.

But as anyone who has worked with oil stains knows, the process isn't completely foolproof. And at this stage of a project, if something goes wrong, it's a serious downer. But the good news is that for every problem you might encounter with oil stains, there's almost always an easy way to prevent it from occurring or to solve it afterward.

1 Stir it Up

If you apply an oil stain and the color looks "weak" and washed out, you might have overlooked an important step. The pigments in oil stain are simply suspended, not dissolved, in the solvent. While the can sits on the shelf unused, the pigments gradually settle to the bottom to form a thick, gooey layer (photo at right).

So after opening a can of stain, I never make assumptions. The stain may look like it's ready to use, but I always give it a good stirring to make certain. You'll need to scrape all the pigments off the bottom and stir until the mix looks uniform. And then for good measure, I close the can and shake it for a minute or two. This ensures the stain will give the color you had expected.

And when you're staining a large project over a period of time, it's a good idea to stir the can periodically.

2 Fix Glue Spots

I think every woodworker's finishing nightmare is to apply stain to a project, only to find some glue was left on the surface and is spoiling the job. The glue won't allow the stain to penetrate into the wood and you end up with a light, unstained area that sticks out like a sore thumb (right photo).

Unfortunately, this is an all too common occurence, but the fix is easy. It starts with some careful spot sanding of the affected area. You want to sand away the glue without creating a dip in the surface. Carefully scraping away the glue, followed by sanding is also an option. Just be sure to sand up to the same grit as the surrounding area.

After double-checking to make sure all the glue is cleaned off, you can restain the sanded area. You may need to go over the surrounding area as well to even out the color.

3 No Streaks or Smears

It's not uncommon, especially when working on a large project, to inadvertently leave a heavy streak or smear of stain behind when cleaning off the excess (photo below). Or you might miss some stain that's lodged in a hard-to-reach corner. Occasionally, the problem is simply a matter of applying stain to too much surface. When you can't clean the excess off fast enough, the stain starts to tack up before you get to it.

Don't panic. This isn't a big deal. In most cases, all you need to do to remove the dried stain is "re-wet" the area with fresh stain. The solvent will soften the stain and allow you to wipe down the area for an even, streak-free color.

4 Matching End Grain

The porous, end grain surfaces on a project will soak up stain like a sponge. The downside is that the end grain looks much darker than the surrounding areas.

But there's an easy way to avoid this unwanted contrast. Before staining, take the time to sand the end grain to a finer grit than the rest of the project. The smoother end grain will trap fewer pigments, and the color will match better (photo below).

5 Avoid Blotching

Some types of wood have a well-deserved reputation for being hard to stain. Cherry, maple, and pine fall into this category. A coat of oil stain usually leaves you with a very blotchy appearance, caused by uneven absorption of the stain (left half of board below).

Here, the best cure is an ounce of prevention. On blotch-prone woods, it's a good idea to apply a wood conditioner before staining.

A conditioner is essentially just a clear stain. It penetrates the surface to partially seal the wood and limit absorption of the stain to follow. This gives you a much better shot at getting a uniform look from your staining job, as demonstrated on the right half of the board.

▲ It's easy to avoid a blotchy staining job. Simply apply a pre-stain wood conditioner.

6 Sand Away Scratches

When you apply an oil stain, the pigments become trapped in the pores and other nooks and crannies on the surface. This is what gives color to the wood.

But you'll find that the stain isn't choosy. Rough, crossgrain sanding scratches or heavy swirls from a power sander can attract and soak up more stain than the surrounding area. Once the stain goes on, the scratches pop right out and spoil the job (lower right photo).

The key is to avoid this problem with careful and thorough sanding before staining. But if it's too late for that, you can always sand away the scratches and then restain.

7 The Perfect Color

The final tip is simple, but it's also one that I rely on frequently.

The problem is that it's often a challenge to find the perfect color of stain for a project. The cherry stain you tested is too red or the mahogany stain is too brown. For me, a custom mix is the solution.

Stain colors of the same brand can always be mixed to get an "in between" color. And even different brands of stain will often make a compatible mix. With a little experimentation, you can usually find the color you're after. Just be sure to keep track of the formula. W

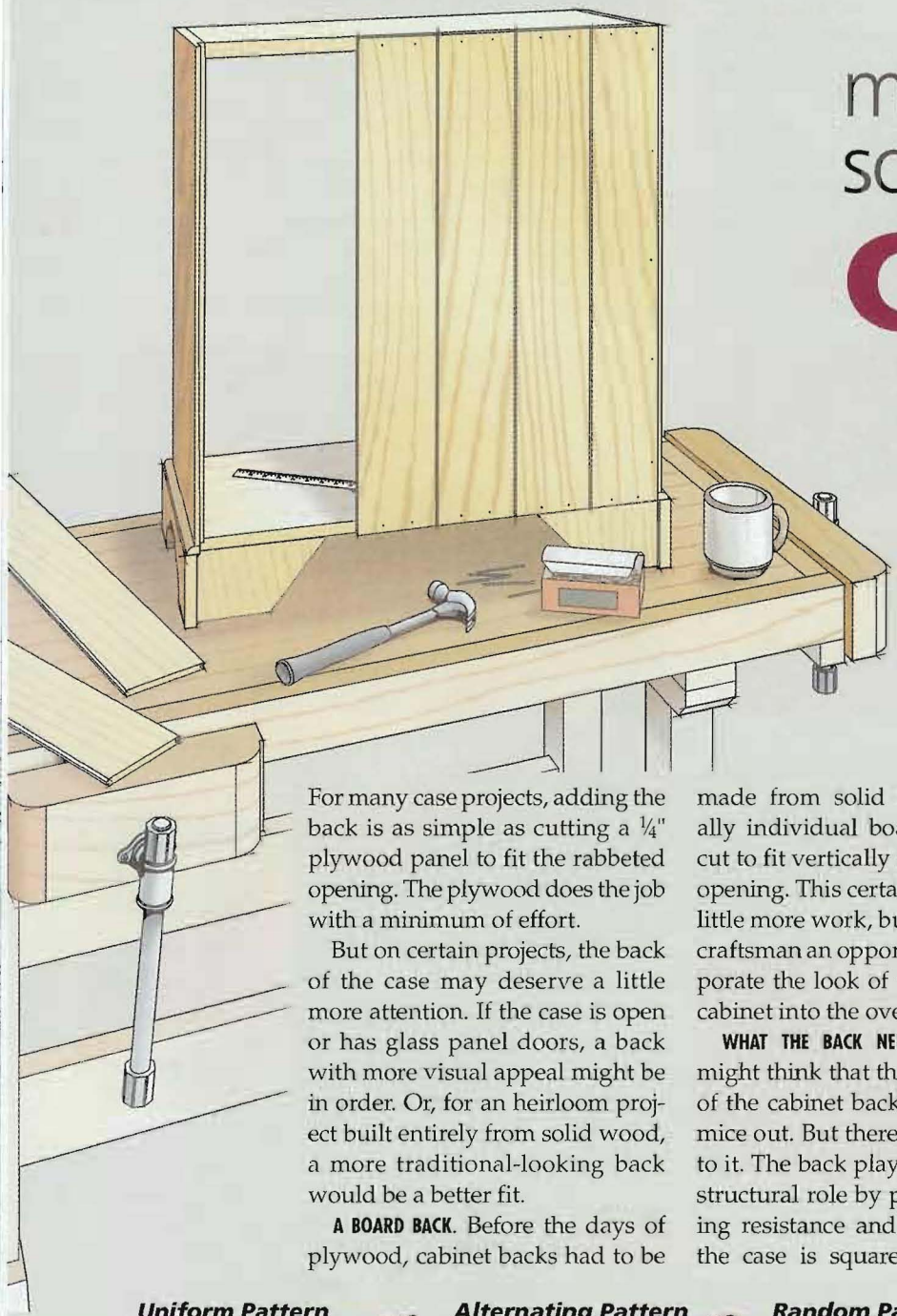

making a solid-wood Cabinet Back

Installing solid-wood back boards is a great way to add to the traditional look of a cabinet.

For many case projects, adding the back is as simple as cutting a ¼" plywood panel to fit the rabbeted opening. The plywood does the job with a minimum of effort.

But on certain projects, the back of the case may deserve a little more attention. If the case is open or has glass panel doors, a back with more visual appeal might be in order. Or, for an heirloom project built entirely from solid wood, a more traditional-looking back would be a better fit.

A BOARD BACK. Before the days of plywood, cabinet backs had to be made from solid wood — usually individual boards that were cut to fit vertically into a rabbeted opening. This certainly involved a little more work, but also gave the craftsman an opportunity to incorporate the look of the back of the cabinet into the overall design.

WHAT THE BACK NEEDS TO DO. You might think that the only purpose of the cabinet back is to keep the mice out. But there is a little more to it. The back plays an important structural role by providing racking resistance and rigidity. Once the case is squared up and the back attached, the likelihood of it going out of square is small.

Second, the back also helps keep the case top, bottom, and sides straight and aligned. With the back firmly attached, the sides or the top and bottom can't spread or bow.

WOOD MOVEMENT. So why not simply glue up a solid-wood panel to fit the back of the case? This would certainly give you the rigidity you need, but wouldn't pass one important test. A solid-wood panel would be too unstable. In other words, it would expand and contract too much with changes in the humidity. As the panel swells and shrinks, it would push and pull on the case, possibly resulting in distortion, cracking, gaps, and even ruptured glue joints.

The key to making a sound, solid-wood cabinet back is to take wood movement into account. This is why individual, "floating" boards are used for the job.

The drawing at the top of the opposite page shows the secret. The boards that make up the back are joined together, but not glued together. A small gap at each joint allows the boards to expand and

Uniform Pattern

Boards of uniform width give formal appearance

Alternating Pattern

Alternating wide and narrow boards draws attention to back

Random Pattern

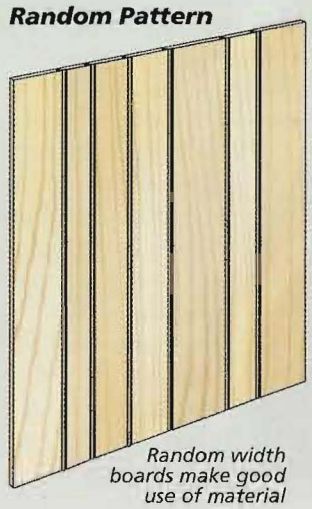

Random width boards make good use of material

contract independently without causing any problems.

CONSIDERATIONS. Installing a board back on a cabinet is pretty straightforward, but there are a lot of minor details to consider.

To accommodate a board back, the case sides are rabbeted. The case top and bottom can be rabbeted or "cut short" to allow the boards to lap completely, as shown in the drawings below. This arrangement gives you a wider surface on which to fasten the boards, while the exposed ends can be hidden by the finished top and base.

STOCK THICKNESS. I've found that thick boards add extra weight to a project and aren't necessary. Back boards that are ⅜"- to ½"-thick will do the job and save on lumber.

BOARD PATTERN. The drawing at the bottom of the opposite page shows three common ways to arrange the boards. For a formal appearance, use boards that are all the same width or alternate wide and narrow boards. Here, be sure to center the pattern so that the boards at each side are equal-width. A random, "use-the-boards-you-have" pattern creates a rustic look.

The width of the boards is going to be dictated by the pattern used. But the wider the board, the more movement, so I limit the width to a maximum of about 8".

JOINT CHOICES. As mentioned, the goal of the joints between the boards is to form a "solid" back, while keeping the boards in alignment *and* allowing them to move freely. There are several good ways to accomplish this.

One of the most common joints used between back boards is a simple shiplap, shown in the left drawing below. The two rabbeted halves of the joint simply overlap to seal the joint. The key here is that you need to leave a small gap in the joint to allow expansion.

A tongue and groove joint (middle drawing below) is a bit more work to make, but will do a better job of keeping the back boards in alignment. Again, a planned gap allows movement.

An alternative to a tongue and groove is the splined joint, shown below at far right. The splines can be free-floating or glued into one of the grooves, but never both.

ADDING DETAIL. The joints between the boards will be noticeable, and this is part of the attraction. Leaving the edges of the boards square will enhance this "board look."

Or, you can add to the visual appeal by cutting a molded profile on one or both sides of the joint. Common profiles include a bead along one edge, a V-groove centered on the joint, or a small roundover on each edge. The drawings below give you a couple of ideas.

FASTENING HOW-TO. Once the back boards are cut to fit the opening, you'll need to fasten them in place. The first rule here is to keep the glue bottle in the cupboard. Nails or screws are called upon for this job. Nails work well for "light-duty" applications, screws will give you more rigidity and holding power on a larger cabinet.

The drawings below show different ways to fasten the boards.

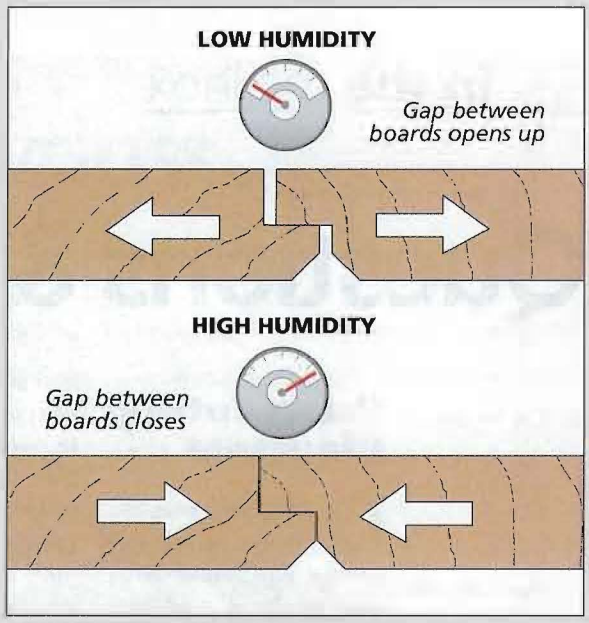

Floating Joints. *The key here is that the back boards are not rigidly fastened to one another. The joints can open and close slightly with changes in the humidity.*

When installing shiplap boards, you can pin both boards with one nail near the edge of the overlapping board. (Just don't put the fastener through the joint.)

Tongue and grooved or splined boards can be pinned in the middle. This keeps the boards centered. If you need several fasteners on a wide board, keep them back from the edges. You don't want it held tightly across its entire width.

Finally, I always fasten the boards into the rabbets at the sides of the case. This reinforces the case and keeps the sides straight.

There's nothing tricky or difficult about adding a solid-wood back to a project. With just a little attention to the details, you can install a board back that's both sound and great looking.

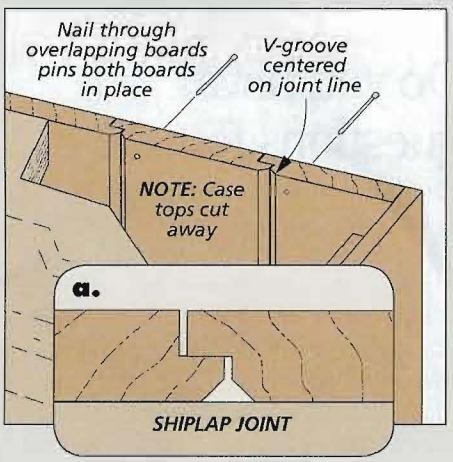

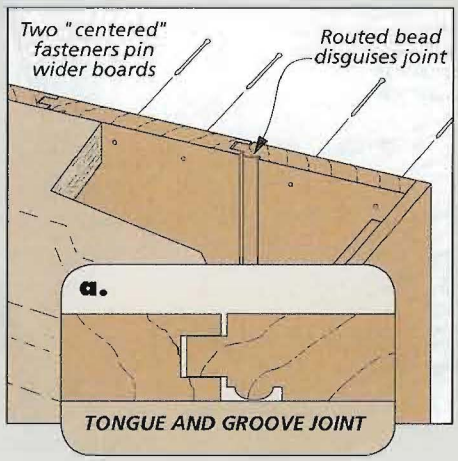

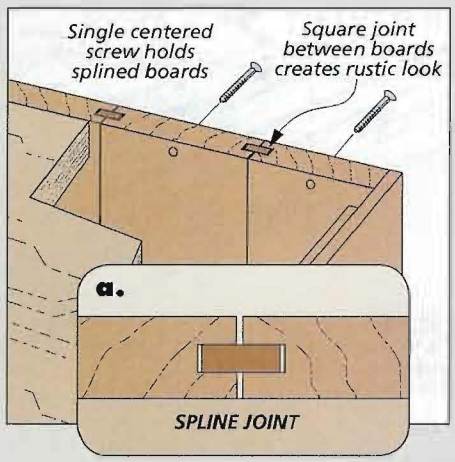

Questions & Answers

Using Cutting Diagrams

Q ***What's the purpose of the cutting diagrams you show with your projects, and how are they used?***

Josh Higdon
Chelan, Washington

A A cutting diagram gives you a rough idea of how much lumber and sheet goods you'll need for a project (drawing at right). How you use a cutting diagram depends on the material.

HARDWOOD. When you go to the lumberyard to purchase wood for a project, the diagram gives you an idea of what size boards to choose. Since lumber is typically sold in board feet, we include that figure in the diagram.

MINOR DEFECTS. In a perfect world, you could lay out the pieces directly from the diagram. But many times the boards you find at the lumberyard have imperfections, like knots and cracks. In most cases, you'll have to change the layout of the cutting diagram to work around the defects. To make up for the waste caused by defects, I usually buy about 20 percent more lumber than the project calls for.

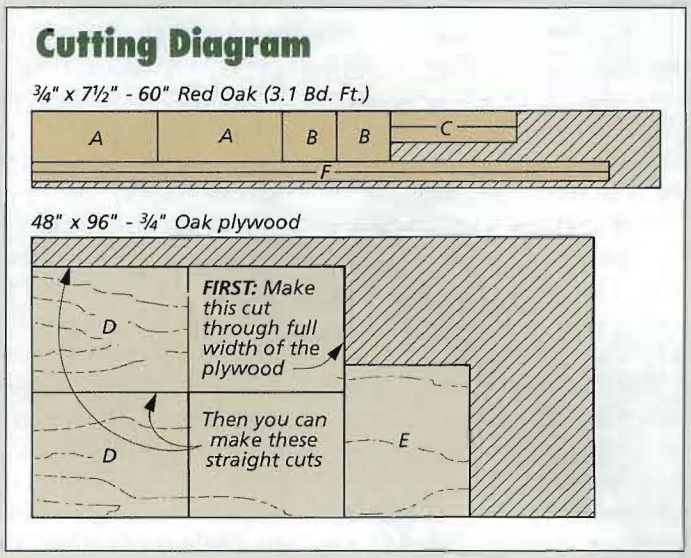

▲ ***Lay Out the Parts.*** *A cutting diagram helps you determine how to lay out the parts on the stock to reduce waste.*

LAYOUT. After selecting the lumber, I mark the imperfections and identify the "good" wood. Then, I lay out the larger pieces first, taking into account the ⅛" kerf for the saw cuts. (It's easier to fit the smaller pieces in later.)

Next, I group similar sized pieces together to cut down on waste and the number of cuts I have to make. I also lay out the pieces slightly oversize. I can trim the parts to exact size as I'm building.

PLYWOOD. Cutting diagrams really come in handy when working with plywood. Since plywood comes in standard size sheets, you can follow the diagram exactly (remember to allow for the saw kerfs). But you still have to make the cuts correctly.

Although not specified in the diagram, making the cuts in a particular order can make the task easier. You can usually spot a cut line that runs the entire length or width of the plywood sheet.

After making the first cut, you're left with more manageable-sized pieces. The order for the rest of the cuts should be readily apparent. W

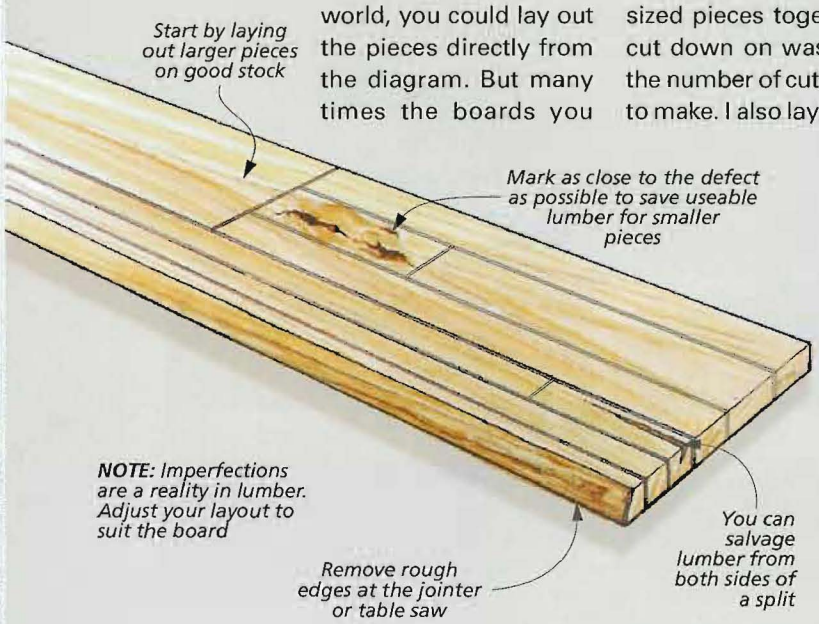

Do you have any questions for us?

If you have a question related to woodworking techniques, tools, finishing, hardware, or accessories, we'd like to hear from you.

Just write down your question and mail it to us: Woodsmith Q&A, 2200 Grand Avenue, Des Moines, Iowa 50312. Or you can email us the question to: woodsmith@woodsmith.com.

Please include your full name, address, and daytime telephone number in case we have questions.

Sources

CHIP CARVING

All you really need to get started chip carving is a basic knife, a way to keep it sharp, and the article on page 38. You can purchase knives, accessories, and books from the *Woodsmith Store* and other sources listed in the margin.

CHAISE LOUNGE

Just in time for summer is the chaise lounge project on page 22. Much of the hardware to build it can be purchased from your local hardware store or home center. I picked up the V-belts from an auto parts store. But there are a few specialty items you'll need to order.

The shoulder connector bolts (00N14.30), the large head connector bolts (00N15.40), the bolt caps (00N20.17), and the hex drive threaded inserts (00N11.20) came from *Lee Valley*. The antique finish, single pin hinges (29157) were ordered from *Rockler*.

SLIDING-TOP TABLE

The sliding-top table described on page 14 is a great project when you need a large table only occasionally. And the hardware and other supplies to build it are easy to find.

The UHMW plastic for the slides (UHMWS-0500-F) came from *Small Parts Inc.* The 50mm connector screws (1420-CWB) and the 70mm connector screws (1426-CWB) were ordered from *McFeely's*.

The veneer for the tabletop came from *Veneer Supplies*. The *Titebond Cold Press Veneer Glue* (145718) I used is available from *Woodcraft*.

Classic Designs had the maple turning blanks (#S1636.SM) I used to make the table legs. And you can get the rest of the hardware and the glass for the tabletop locally.

STROPPING

Stropping is a good way to keep sharp edges on your tools. The leather strop that is shown on page 8 came from the *Woodsmith Store*. Similar strops are available from sources listed in the right margin.

In addition to the strop, you'll need an abrasive compound to hone the edges. The *Yellowstone* compound came from *Woodcraft*. The *Veritas Honing Compound* is available from *Lee Valley* and the *Woodsmith Store*.

HAND SCRAPERS

Hand scrapers, like the ones described on page 42, will give you great results for a glass-smooth finish on your workpieces.

I got the *Super-Hard Curved Scraper Set* (05K20.10) from *Lee Valley*. The *Veritas Scraper Holder* (05K33.01) and the *Tri-Burnisher* (05K32.01) came from the *Woodsmith Store* and are available from *Lee Valley* as well. The sharpening jig is available at the *Woodsmith Store*.

To clean up moldings and carvings, you can get the *Auriou* profile scrapers from *The Best Things*, listed in the right margin.

CUTTING GAUGES

The article on page 10 shows you several good reasons to include a cutting gauge in your toolbox. They're great tools for laying out the pieces of your projects.

The rosewood gauge shown in the article is from *Woodcraft*. Other cutting gauges are available from sources listed in the right margin.

INCRA JIG

The *Incra Universal Precision Positioning Jig* on page 12 brings precision to a more affordable level. This jig is available only through *Rockler*. They also carry the accessories for the jig. W

Online Customer Service

Click on *Manage My Account* at **www.woodsmith.com**

- Access your account status
- Change your mailing or email address
- Pay your bill
- Renew your subscription
- Tell us if you've missed an issue
- Find out if your payment has been received

MAIL ORDER SOURCES

Project supplies may be ordered from the following companies:

Woodsmith Store
800-444-7527
woodsmithstore.com
Chip Carving Knives, Scrapers, Strops, Veritas Stropping Compound

Classic Designs
800-843-7405
tablelegs.com
Maple Turning Squares

Hartville Tool
800-345-2396
hartvilletool.com
Cutting Gauge

Lee Valley
800-871-8158
leevalley.com
Bolt Caps, Chip Carving Knives, Connector Bolts, Cutting Gauges, Scrapers, Strops, Stropping Compound, Threaded Inserts

Lie-Nielsen
800-327-2520
lie-nielsen.com
Hand Scrapers

McFeely's
800-443-7937
mcfeelys.com
Connector Screws

Rockler
800-279-4441
rockler.com
Chip Carving Knives, Hinges, Incra Jig, Strops

Small Parts Inc.
800-220-4242
smallparts.com
UHMW sheet

The Best Things
800-884-1373
thebestthings.com
Auriou Scraper Set

Tools for Working Wood
800-426-4613
toolsforworkingwood.com
Cutting Gauge

Veneer Supplies
888-598-3633
joewoodworker.com
Ribbon-Figured Mahogany Veneer

Woodcraft
800-225-1153
woodcraft.com
Cutting Gauge, Stropping Compound, Veneer Glue

Woodsmith®

HARDBOUND VOLUMES

This set includes six hardbound volumes of ***Woodsmith*** *(Volumes 22 through 27). Each volume includes a year of issues, plus a table of contents and a handy index.*
Buy them for $29.95 each. Or get the whole six-volume set for $139.50 and ***SAVE $40***
— that's like getting one volume FREE.
(Offer expires 12/31/07)

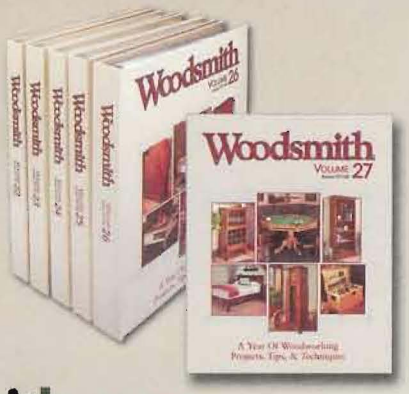

Go to www.Woodsmith.com
or Call 1-800-444-7527 Today to Order Yours!

#BXNCBDD **********SCH 5-DIGIT 94952
#WSMD1D449645D/6# BB JUL09 R017 WS01
RONALD BURNETT B243D
333 N. MCDOWELL BL #C372 P569
PETALUMA CA 94954-7309

looking inside
Final Details

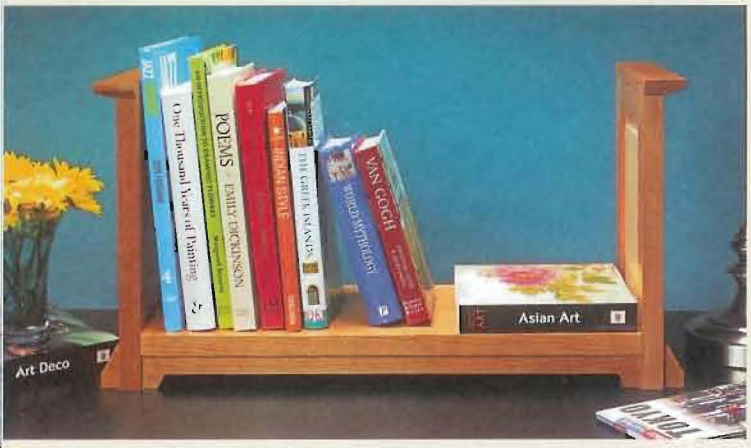

▲ *Chip-Carved Book Rack.* Here's a small weekend project that combines a classic Craftsman look and some great joinery. And it's a great chance to try your hand at some simple chip carving. Turn to page 34 to get started.

▼ *Sliding-Top Table.* It's a table for two *or* a table for four. When extra seating is needed, the nested tops slide apart effortlessly to double the size of the table. Top off this slick function with clean, contemporary lines and this project is a winner. The details start on page 14.

▼ *Chaise Lounge.* The photo below says it all. Great looking, comfortable, and solidly built — this outdoor project comes just in time for the summer season. You'll find everything you need to know on page 22.